Beaver

Building manual

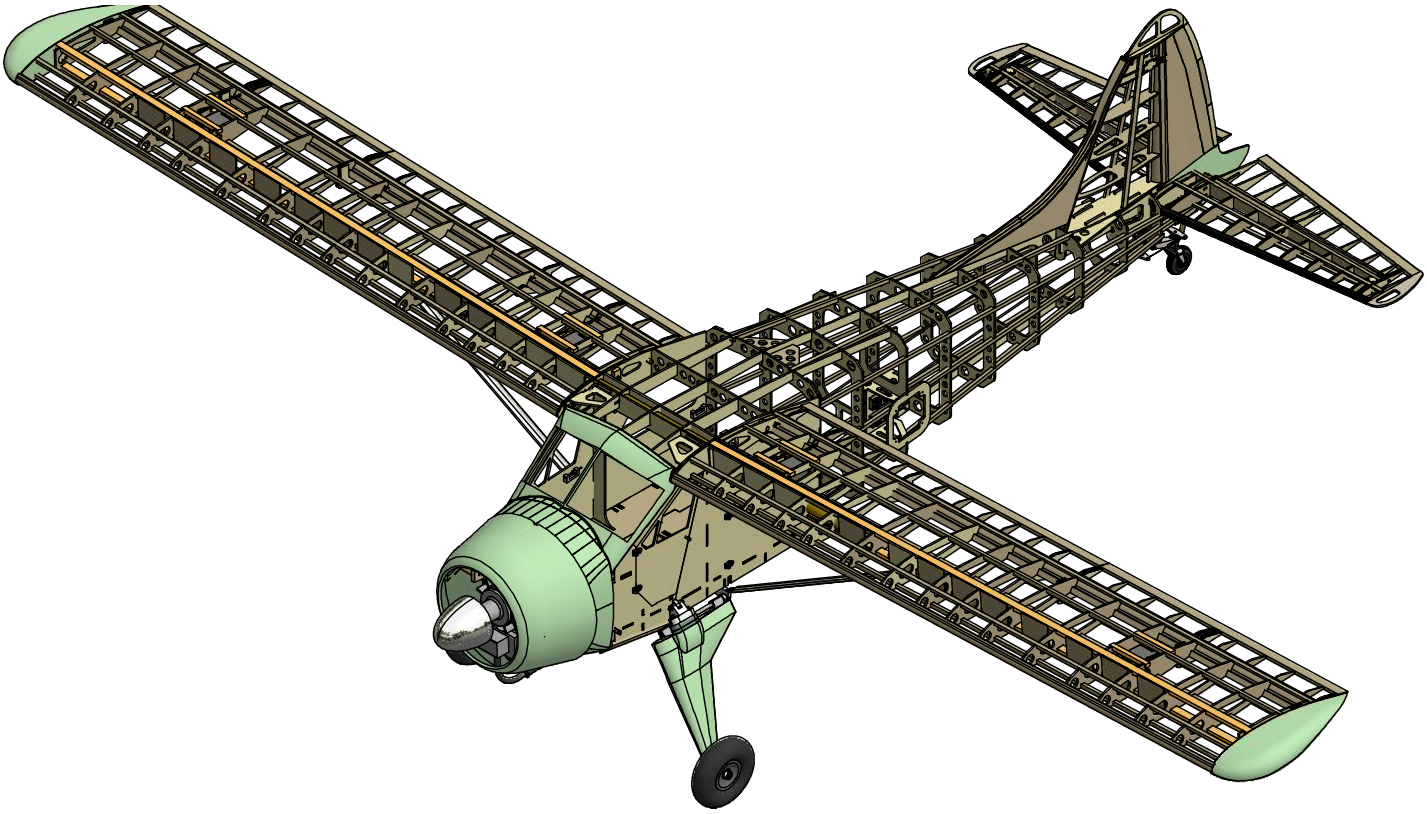

MR Aerodesign

Martin Rousseau

01-2013

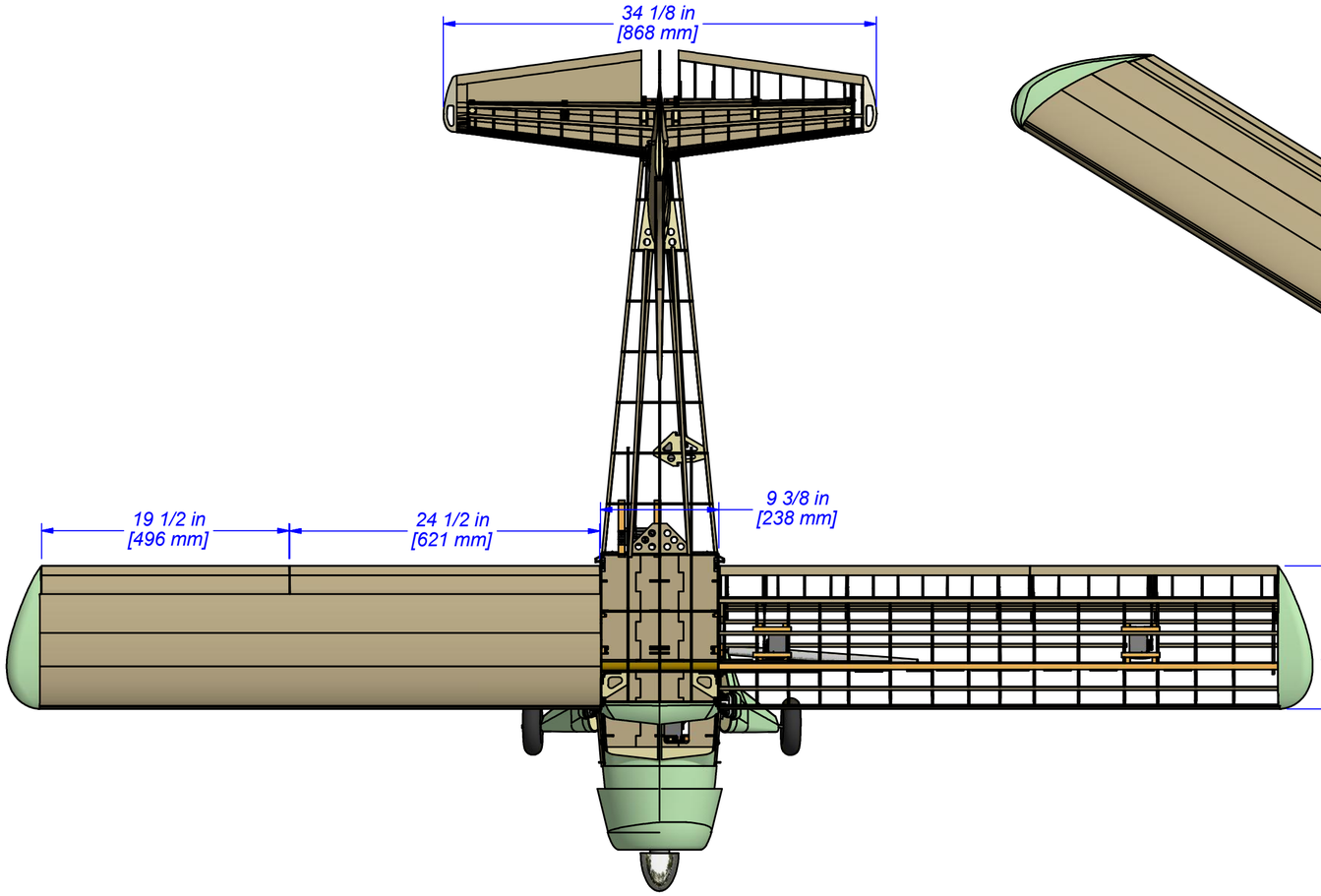

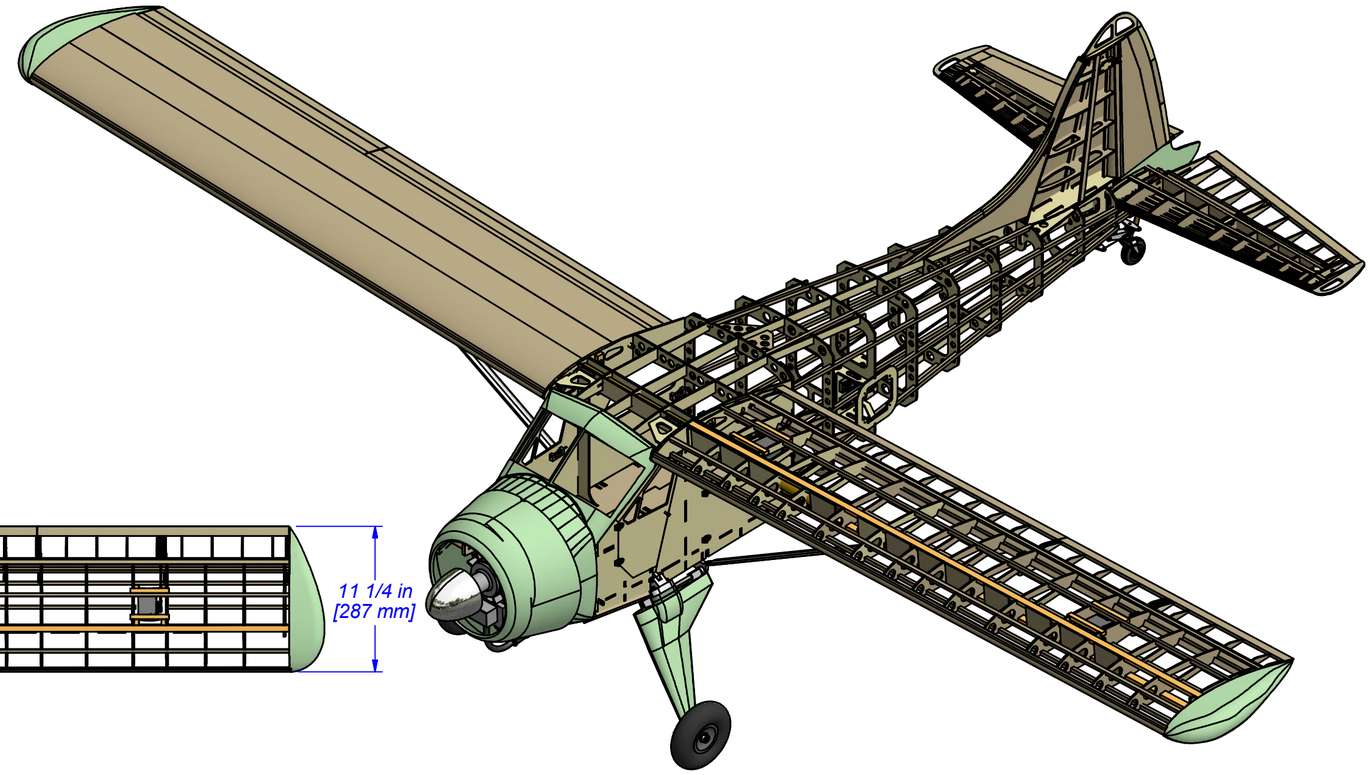

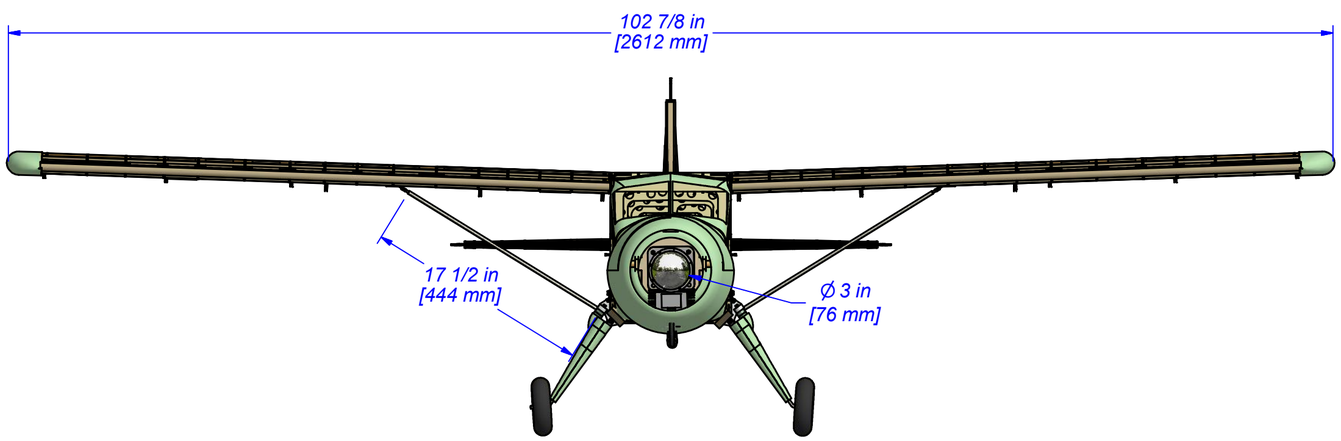

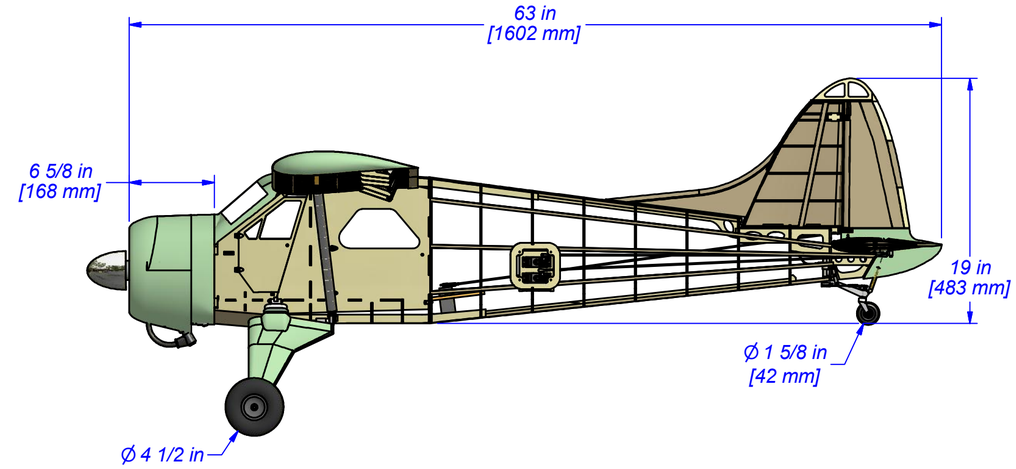

MR Aerodesign
Martin Rousseau

Beaver

MR Aerodesign www.mraerodesign.com	
Overall view	
DHC-2 Beaver (18%)	
Drawn by:	Martin Rousseau
Drawing #	AA-3view.idw
2013-01-02	Rev.: 3

MR Aerodesign
Martin Rousseau

DHC-2 Beaver (18%)

# PART	DESCRIPTION	QTY	# PART	DESCRIPTION	QTY	# PART	DESCRIPTION	QTY
E14	Balsa 1/8"	2	W8	Balsa 1/8"	2	F4	Ply 1/8"	2
S11	Balsa 1/8"	2	WP4	Balsa 1/8"	6	F5	Ply 1/8"	1
S12	Balsa 1/8"	2	A3	Balsa 3/32"	21	F6	Ply 1/8"	1
S2	Balsa 1/8"	2	E11	Balsa 3/32"	4	F7	Ply 1/8"	3
S3	Balsa 1/8"	2	E16	Balsa 3/32"	2	F9A	Ply 1/8"	1
S7	Balsa 1/8"	2	E18	Balsa 3/32"	2	FA	Ply 1/8"	2
T2	Balsa 1/8"	1	E19	Balsa 3/32"	2	FAAD	Ply 1/8"	2
T3	Balsa 1/8"	1	E4	Balsa 3/32"	2	FB	Ply 1/8"	2
T4	Balsa 1/8"	1	E7	Balsa 3/32"	2	FD	Ply 1/8"	1
T5	Balsa 1/8"	1	E8	Balsa 3/32"	2	FE1	Ply 1/8"	1
T6	Balsa 1/8"	1	E9	Balsa 3/32"	2	FE2	Ply 1/8"	1
T7	Balsa 1/8"	1	FL1	Balsa 3/32"	14	FE3	Ply 1/8"	1
W7	Balsa 1/8"	16	FL3	Balsa 3/32"	10	FE4	Ply 1/8"	1
A6	Balsa 1/16"	1	W-DH-1	Balsa 3/32"	2	FF	Ply 1/8"	1
FL6	Balsa 1/16"	2	W-DH-2	Balsa 3/32"	2	FG	Ply 1/8"	2
WP2	Balsa 1/16"	6	WP1	Balsa 3/32"	6	FH	Ply 1/8"	2
WP5	Balsa 1/16"	6	F1	Ply 1/4"	1	FI	Ply 1/8"	2
D6	Balsa 1/4"	1	F23	Ply 1/4"	2	FIA	Ply 1/8"	1
D7	Balsa 1/4"	1	FW1	Ply 1/4"	1	FJ	Ply 1/8"	1
WP1A	Balsa 1/4"	2	FW2	Ply 1/4"	2	FK	Ply 1/8"	1
A1	Balsa 1/8"	6	FW3	Ply 1/4"	1	FL	Ply 1/8"	2
A4	Balsa 1/8"	4	FW-4	Ply 1/4"	3	FL4	Ply 1/8"	2
D1	Balsa 1/8"	1	A5	Ply 1/64"	12	FM	Ply 1/8"	1
D2	Balsa 1/8"	1	FL5	Ply 1/64"	12	FO	Ply 1/8"	2
D3	Balsa 1/8"	1	WP3	Ply 1/64"	12	FP	Ply 1/8"	2
D4	Balsa 1/8"	1	WP6	Ply 1/64"	12	R1	Ply 1/8"	1
D5	Balsa 1/8"	1	A2	Ply 1/8"	2	R10	Ply 1/8"	1
E13	Balsa 1/8"	2	E1	Ply 1/8"	2	R12	Ply 1/8"	1
F10A	Balsa 1/8"	1	E10	Ply 1/8"	2	R15	Ply 1/8"	2
F10B	Balsa 1/8"	2	E12	Ply 1/8"	2	R17	Ply 1/8"	2
F22	Balsa 1/8"	4	E15	Ply 1/8"	4	R2	Ply 1/8"	1
F9	Balsa 1/8"	1	E17	Ply 1/8"	4	R3	Ply 1/8"	1
FL2	Balsa 1/8"	6	E2	Ply 1/8"	2	R4	Ply 1/8"	1
FN-A	Balsa 1/8"	1	E20	Ply 1/8"	4	R7	Ply 1/8"	1
FN-B	Balsa 1/8"	1	E3	Ply 1/8"	2	R8	Ply 1/8"	1
FN-C	Balsa 1/8"	1	E5	Ply 1/8"	2	S13	Ply 1/8"	4
R13	Balsa 1/8"	2	E6	Ply 1/8"	2	S14	Ply 1/8"	8
R14	Balsa 1/8"	1	F10L	Ply 1/8"	1	S1A	Ply 1/8"	2
R16	Balsa 1/8"	1	F10R	Ply 1/8"	1	STR-1	Ply 1/8"	20
R18	Balsa 1/8"	1	F11L	Ply 1/8"	1	STR-2	Ply 1/8"	10
R5	Balsa 1/8"	1	F11R	Ply 1/8"	1	STR3	Ply 1/8"	10
R6	Balsa 1/8"	1	F12L	Ply 1/8"	1	T1	Ply 1/8"	1
R9	Balsa 1/8"	1	F12R	Ply 1/8"	1	T11	Ply 1/8"	2
S1	Balsa 1/8"	1	F13	Ply 1/8"	2	W1	Ply 1/8"	2
S10	Balsa 1/8"	2	F14	Ply 1/8"	2	W2	Ply 1/8"	2
S4	Balsa 1/8"	2	F15	Ply 1/8"	2	W3	Ply 1/8"	2
S5	Balsa 1/8"	2	F16	Ply 1/8"	2	W4	Ply 1/8"	2
S6	Balsa 1/8"	2	F17	Ply 1/8"	1	W5	Ply 1/8"	2
S8	Balsa 1/8"	2	F18	Ply 1/8"	1	W6	Ply 1/8"	2
S9	Balsa 1/8"	2	F19	Ply 1/8"	1	W7A	Ply 1/8"	2
STR1A	Balsa 1/8"	10	F2	Ply 1/8"	1	W-SW-1	Ply 1/8"	10
W7S	Balsa 1/8"	4	F3	Ply 1/8"	2	W-SW-4	Ply 1/8"	2

DHC-2 Beaver (18%)

PART NUMBER	DESCRIPTION	LENGTH	QTY	
T-TE-3	Balsa 1/16" x 1 1/2"	8 3/8	1	**Balsa 1/16" x 3" x 36" (5x) Balsa 1/16" x 3" x 48" (1x)**
W-TE-1	Balsa 1/16" x 1 1/2"	44 3 /8	2	
T-TE-4	Balsa 1/16" x 1"	1	1	
AI-SH-1	Balsa 1/16" x 2"	19 5/8	1	
AI-SH-2	Balsa 1/16" x 3"	24 1/2	2	
FL-SH-2	Balsa 1/16" x 3"	24 1/2	2	
D-SH-1	Balsa 1/16" x 4"	10	1	**Balsa 1/16" x 4" x 36" (3x)**
D-SH-2	Balsa 1/16" x 4"	10	1	
E-SH-1	Balsa 1/16" x 4"	14 5/8	4	
F-ST-05	Balsa 1/4" x 1 1/2"	36	2	**Balsa 1/4" x 3" x 36" (2x)**
F-ST-06	Balsa 1/4" x 1 1/2"	12 1/4	2	
F-ST-07	Balsa 1/4" x 1 1/2"	4 1/2	2	
E-BL-1	Balsa 1/4" x 1 1/8"	4 1/2	4	
E-LE-3	Balsa 1/4" x 1"	5 7/8	2	**Balsa 1/4" x 1" x 36" (4x)**
F-ST-04	Balsa 1/4" x 1"	36	2	
R-LE-1	Balsa 1/4" x 1"	8 3/8	2	
S-TE-1	Balsa 1/4" x 1"	15 1/4	2	
AI-LE-2	Balsa 1/4" x 1/2"	9 3/8	2	**Balsa 1/4" x 1/2" x 36" (4x)**
AI-LE-3	Balsa 1/4" x 1/2"	9 7/8	2	
E-LE-6	Balsa 1/4" x 1/2"	7/8	2	
FL-LE-2	Balsa 1/4" x 1/2"	24 1/2	2	
T-LE-1	Balsa 1/4" x 1/2"	12	1	
F-ST-01	Balsa 1/4" x 1/4"	24 1/2	2	**Balsa 1/4" x 1/4" x 36" (13x) Balsa 1/4" x 1/4" x 48" (8x)**
F-ST-02	Balsa 1/4" x 1/4"	31 5/8	5	
F-ST-02D	Balsa 1/4" x 1/4"	31 5/8	1	
F-ST-03	Balsa 1/4" x 1/4"	34 7/8	1	
F-ST-03D	Balsa 1/4" x 1/4"	34 7/8	1	
W-ST-1	Balsa 1/4" x 1/4"	44 3/8	8	
W-ST-4	Balsa 1/4" x 1/4"	3 1/8	2	
W-ST-5	Balsa 1/4" x 1/4"	26 3/4	2	
W-ST-6	Balsa 1/4" x 1/4"	9 3/4	2	
AI-TE-1	Balsa 1/4" x 3/4"	19 1/2	2	**Balsa 1/4" x 3/4" x 36" (5x) Balsa 1/4" x 3/4" x 48' (2x)**
E-TE-1	Balsa 1/4" x 3/4"	14 3/4	2	
FL-TE-1	Balsa 1/4" x 3/4"	24 1/2	2	
R-LE-2	Balsa 1/4" x 3/4"	1	1	
S-LE-2	Balsa 1/4" x 3/4"	15 1/4	2	
W-LE-1	Balsa 1/4" x 3/4"	44 1/4	2	
W-ST-2	Balsa 1/4" x 3/8"	44 1/4	2	**Balsa 1/4" x 3/8" x 48" (2x)**
E-LE-1	Balsa 1/8" x 1/4"	5 7/8	4	**Balsa 1/8" x 1/4" x 36" (3x)**
E-S-1	Balsa 1/8" x 1/4"	7/8	4	
S-MS-1	Balsa 1/8" x 1/4"	15 1/4	4	
T-TE-1	Balsa 1/8" x 1/4"	8 1/2	1	

T-TE-2	Balsa 1/8" x 1/4"	1	1	
E-LE-4	Balsa 1/8" x 3/4"	7	2	**Balsa 1/8" x 3/4" x 36" (1x)**
T-MS-1	Balsa 1/8" x 3/8"	10 1/8	2	**Balsa 1/8" x 3/8" x 36" (1x) Balsa 1/8" x 1/2" x 48" (2x)**
W-ST-3	Balsa 1/8" x 3/8"	44 1/4	2	
W-SW-2	Balsa 3/32" x 1 1/2"	2 1/8	17	**Balsa 3/32" x 3" x 36" (6x) Balsa 3/32" x 3" x 48" (5x)**
E-LE-5	Balsa 3/32" x 1/2"	1	2	
S-LE-1	Balsa 3/32" x 1/2"	15 3/8	2	
E-LE-2	Balsa 3/32" x 1/4"	7 1/2	4	
W-MS-2	Balsa 3/32" x 1/4"	13 1/2	8	
W-SH-2	Balsa 3/32" x 3"	44 3/8	2	
W-SH-6	Balsa 3/32" x 3"	44 3/8	2	
T-LE-2	Balsa 3/32" x 3/4"	12	1	
W-LE-2	Balsa 3/32" x 3/4"	44 3/8	2	
W-SH-5	Balsa 3/32" x 2"	44 3/8	2	**Balsa 3/32" x 4" x 36" (12x) Balsa 3/32" x 4" x 48" (7x)**
T-SH-1	Balsa 3/32" x 4"	10	2	
R-SH-1	Balsa 3/32" x 4"	10	2	
S-SH-1	Balsa 3/32" x 4"	30 1/4	2	
W-SH-1	Balsa 3/32" x 4"	44 3/8	2	
W-SH-3	Balsa 3/32" x 4"	44 3/8	2	
W-SH-4	Balsa 3/32" x 4"	44 3/8	2	
R-BL-1	Balsa 3/8" x 1 3/4"	5 1/8	2	**Balsa 3/8" x 2" x 12" (1x)**
F-ST-08	Balsa triangle 1/2"	3 1/2	2	**Balsa triangle 1/2" x 16" (1x)**
F-ST-09	Balsa triangle 1/2"	8 3/8	1	
FW-5	Dowel Ø1/2"	1 1/2	2	**Dowel Ø1/2 x 6" (1x)**
FW-6	Dowel Ø1/2"	1	1	
W-DW-1	Dowel Ø1/4"	1	2	**Dowel Ø1/4 x 3" (1x)**
Dowel-1	Dowel Ø3/8"	3/4	8	**Dowel Ø3/8 x 6" (1x)**
F-STR-1	Hardwood 1/4" x 1/2"	4 1/2	2	**Hardwood 1/4" x 1/2" x 36" (1x) Hardwood 1/4" x 1/2" x 48" (4x)**
F-STR-3	Hardwood 1/4" x 1/2"	1	4	
W-MS-1	Hardwood 1/4" x 1/2"	44 3/8	4	
W-MS-3	Hardwood 1/4" x 1/2"	5	2	
W-STR-1	Hardwood 1/4" x 3/8"	3	8	**Hardwood 1/4" x 3/8" x 36" (1x)**
F-STR-2	Hardwood 1/4" x 3/8"	2 1/2	2	
W-STR-2	Hardwood 1/4" x 3/8"	1/2	16	
E-TU-1	Brass tube Ø1/4" (O.D.)	4	2	**Brass tube Ø1/4" x 12" (1x)**
R-TU-1	Brass tube Ø1/4" (O.D.)	4	1	
E-TU-2	Brass tube Ø1/8" (O.D.)	1	4	**Brass tube Ø1/8" x 6" (1x)**
R-HI-BU-3	Brass tube Ø1/8" (O.D.)	3/4	1	
E-HI-2-BU	Brass tube Ø5/32" (O.D.)	3/8	4	**Brass tube Ø5/32" x 6" (1x)**
R-HI-1-BU	Brass tube Ø5/32" (O.D.)	3/8	1	
E-HI-1-BU	Brass tube Ø9/32" (O.D.)	3/8	2	**Brass tube Ø9/32" x 6" (1x)**
R-HI-BU-2	Brass tube Ø9/32" (O.D.)	3/8	1	

FIN

Vertical Fin Parts List		
# Part	Description	Qty
T-LE-1	Balsa 1/4" x 1/2"	1
T-LE-2	Balsa 3/32" x 3/4"	1
T-MS-1	Balsa 1/8" x 3/8"	2
T-SH-1	Balsa 3/32"	1
T-SH-1	Balsa 3/32"	1
T-TE-1	Balsa 1/8" x 1/4"	1
T-TE-2	Balsa 1/8" x 1/4"	1
T-TE-3	Balsa 1/16" x 1 1/2"	1
T-TE-4	Balsa 1/16" x 1"	1
T1	Ply 1/8"	1
T11	Ply 1/8"	2
T2	Balsa 1/8"	1
T3	Balsa 1/8"	1
T4	Balsa 1/8"	1
T5	Balsa 1/8"	1
T6	Balsa 1/8"	1
T7	Balsa 1/8"	1

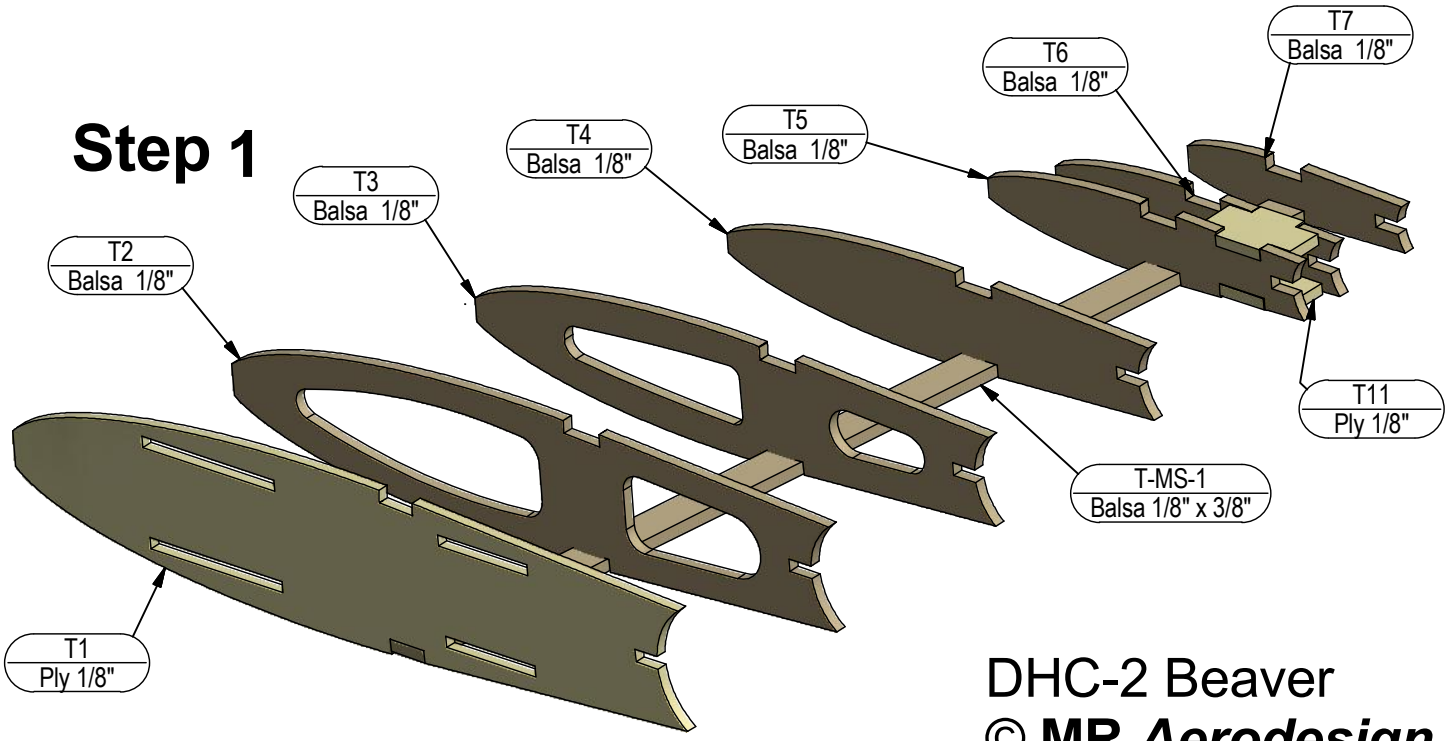

DHC-2 Beaver

© **MR *Aerodesign***

FIN

Step 2

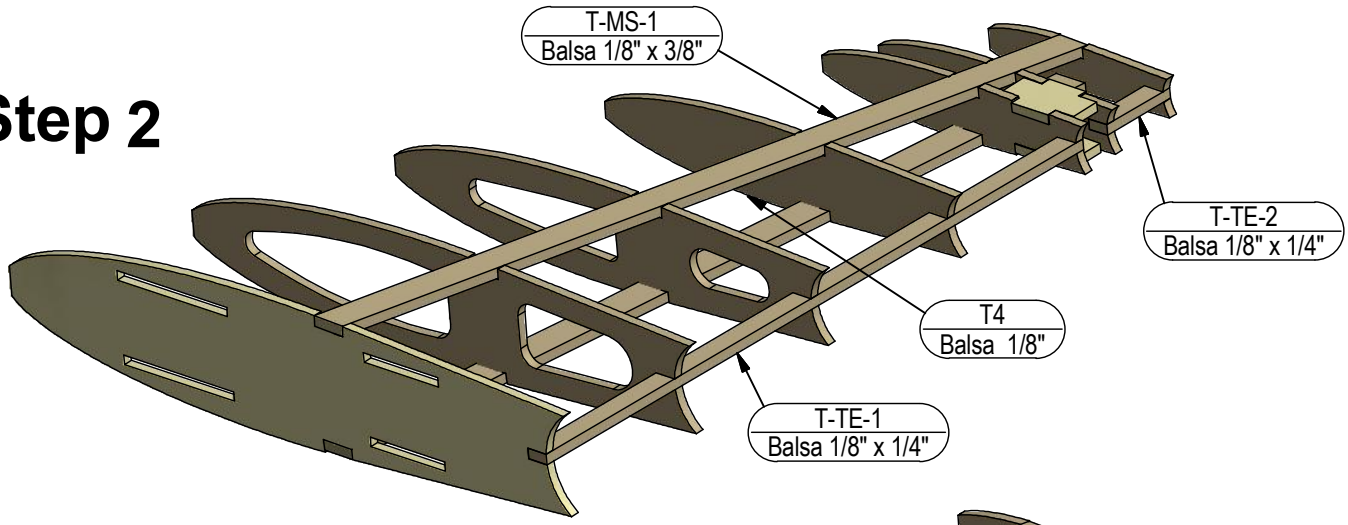

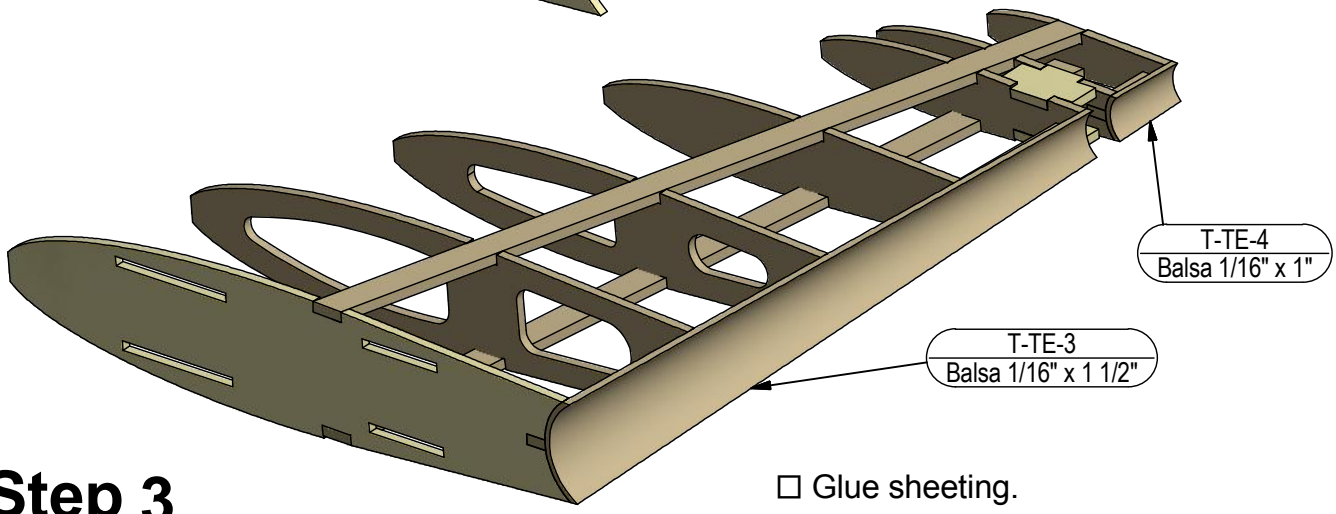

Step 3

- ☐ Glue sheeting.
- ☐ Remove the fin from the building board.
- ☐Cut tab.
- ☐Glue sheeting on the other side.

Step 4

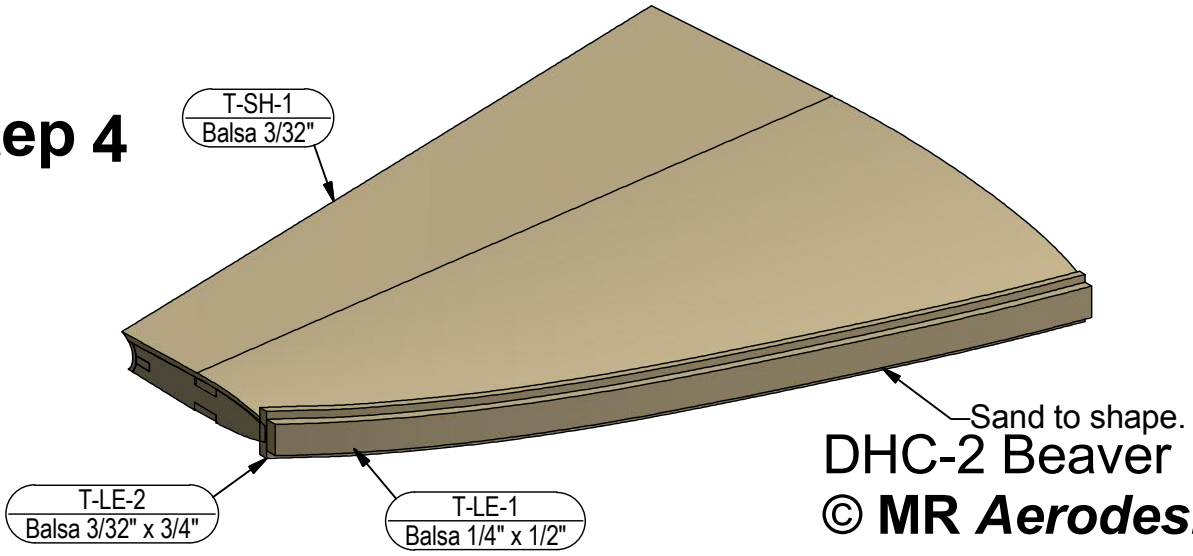

DHC-2 Beaver

© **MR *Aerodesign***

01-2013

Rudder

Rudder Parts List			Rudder Parts List		
# Part	Material	Qty	# Part	Material	Qty
DUB557	Nylon horn bracket	1	R13	Balsa 1/8"	1
R-BL-1	Balsa 3/8" x 1 3/4"	2	R14	Balsa 1/8"	1
R-HI-1-BU	Brass tube Ø5/32" (O.D.)	1	R15	Ply 1/8"	2
R-HI-BU-2	Brass tube Ø9/32" (O.D.)	1	R16	Balsa 1/8"	1
R-HI-BU-3	Brass tube Ø1/8" (O.D.)	1	R17	Ply 1/8"	2
R-LE-1	Balsa 1/4" x 1"	1	R18	Balsa 1/8"	1
R-LE-1	Balsa 1/4" x 1"	1	R2	Ply 1/8"	1
R-LE-2	Balsa 1/4" x 3/4"	1	R3	Ply 1/8"	1
R-SH-1	Balsa 3/32" x 4"	1	R4	Ply 1/8"	1
R-SH-1	Balsa 3/32" x 4"	1	R5	Balsa 1/8"	1
R-TU-1	Brass tube Ø1/4" (O.D.)	1	R6	Balsa 1/8"	1
R1	Ply 1/8"	1	R7	Ply 1/8"	1
R10	Ply 1/8"	1	R8	Ply 1/8"	1
R12	Ply 1/8"	1	R9	Balsa 1/8"	1
R13	Balsa 1/8"	1	SHCS4-016	SHCS 4-40 x 1" lg.	1

Step 1

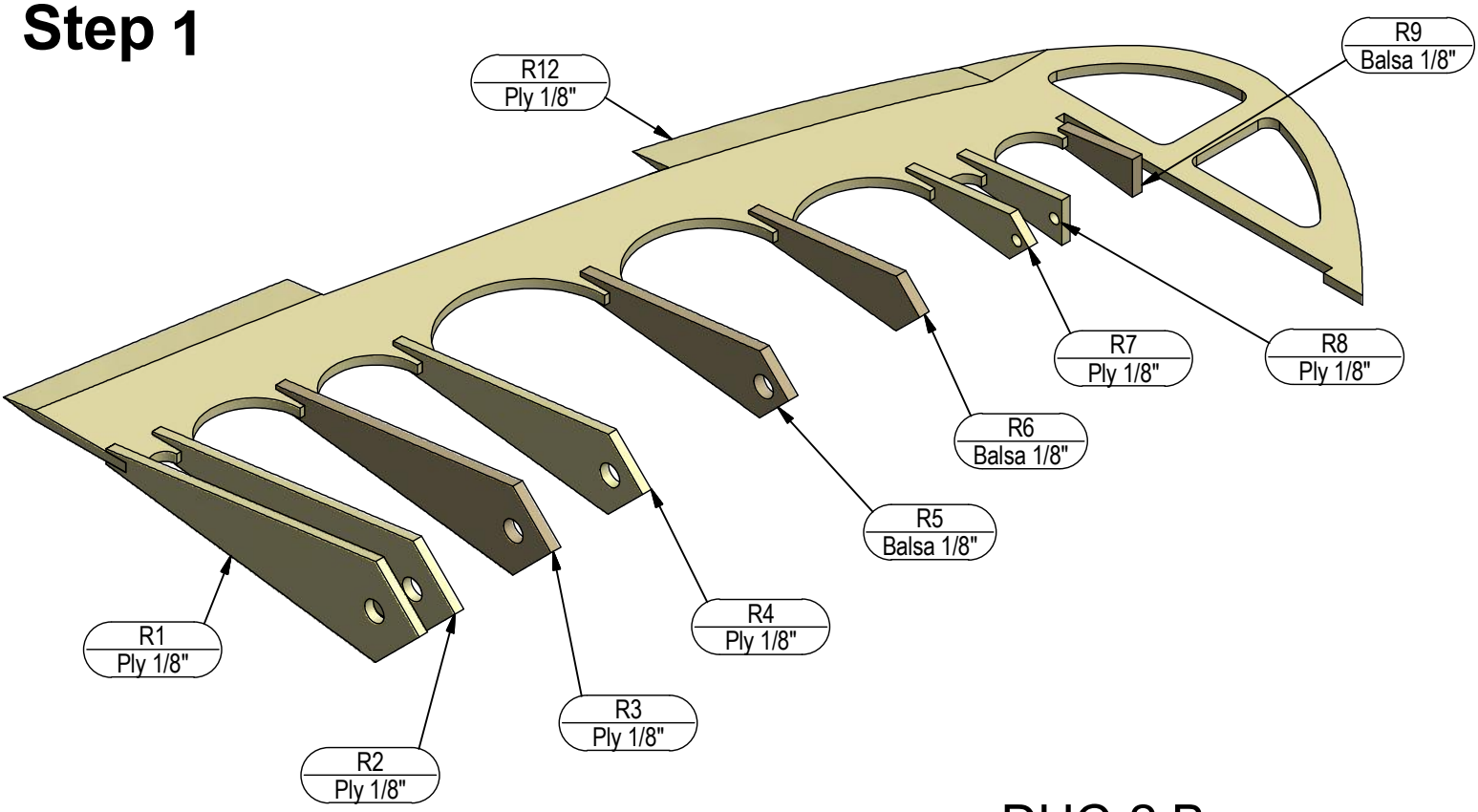

DHC-2 Beaver

© **MR *Aerodesign***

01-2013

Rudder

Step 2

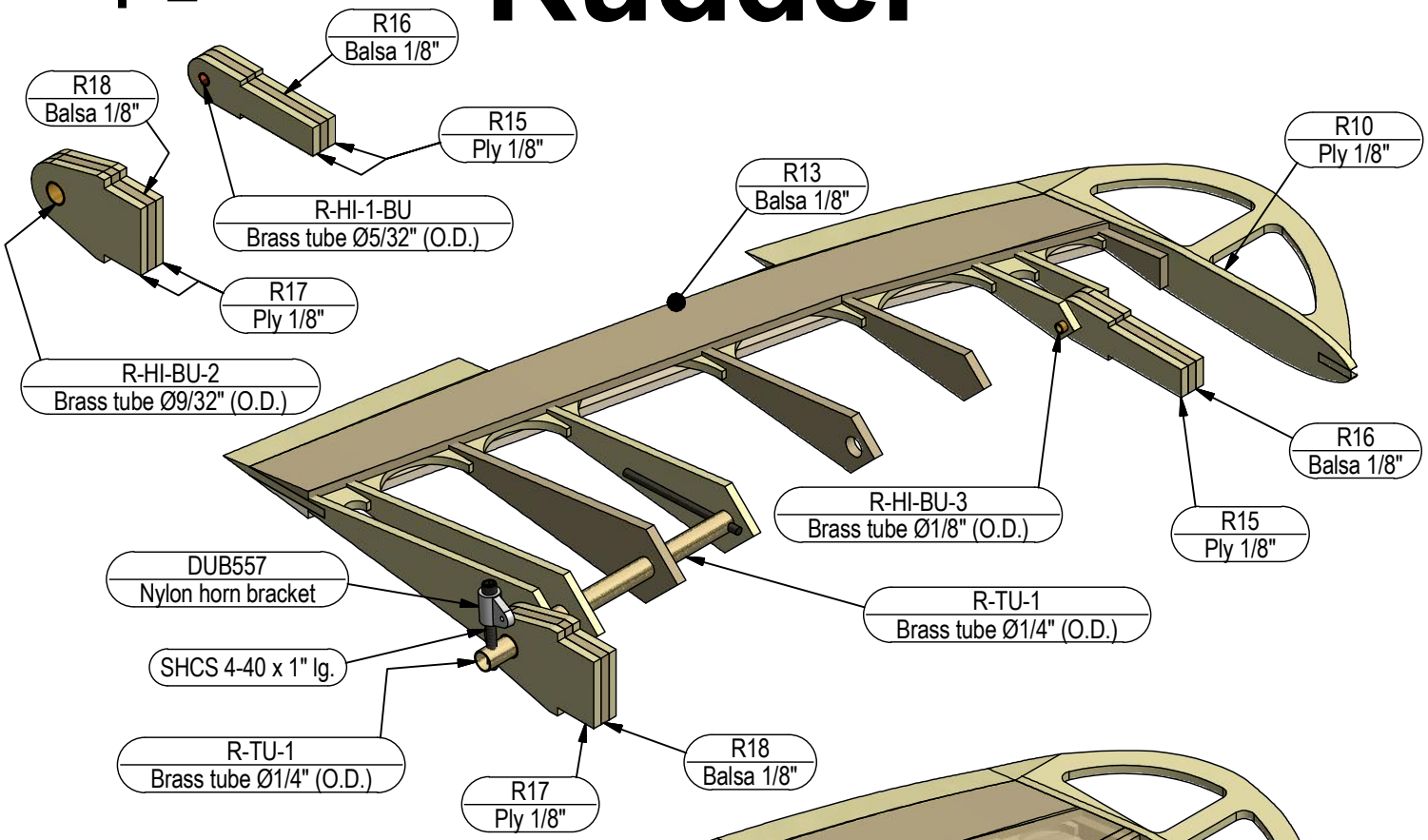

Step 3

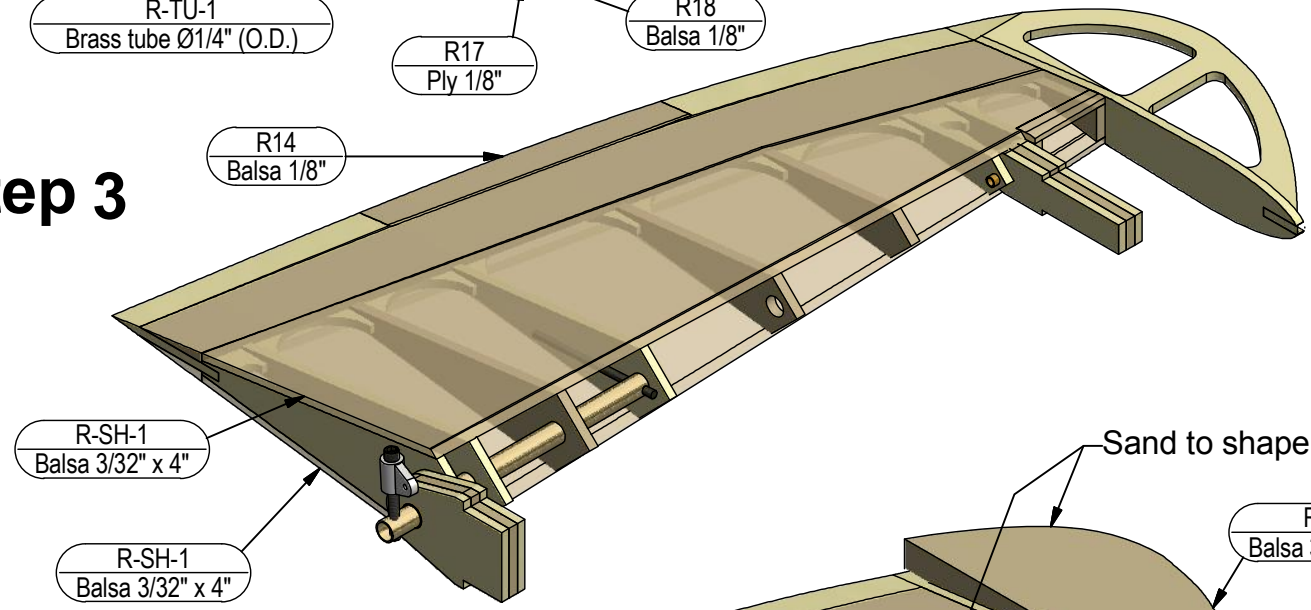

Step 4

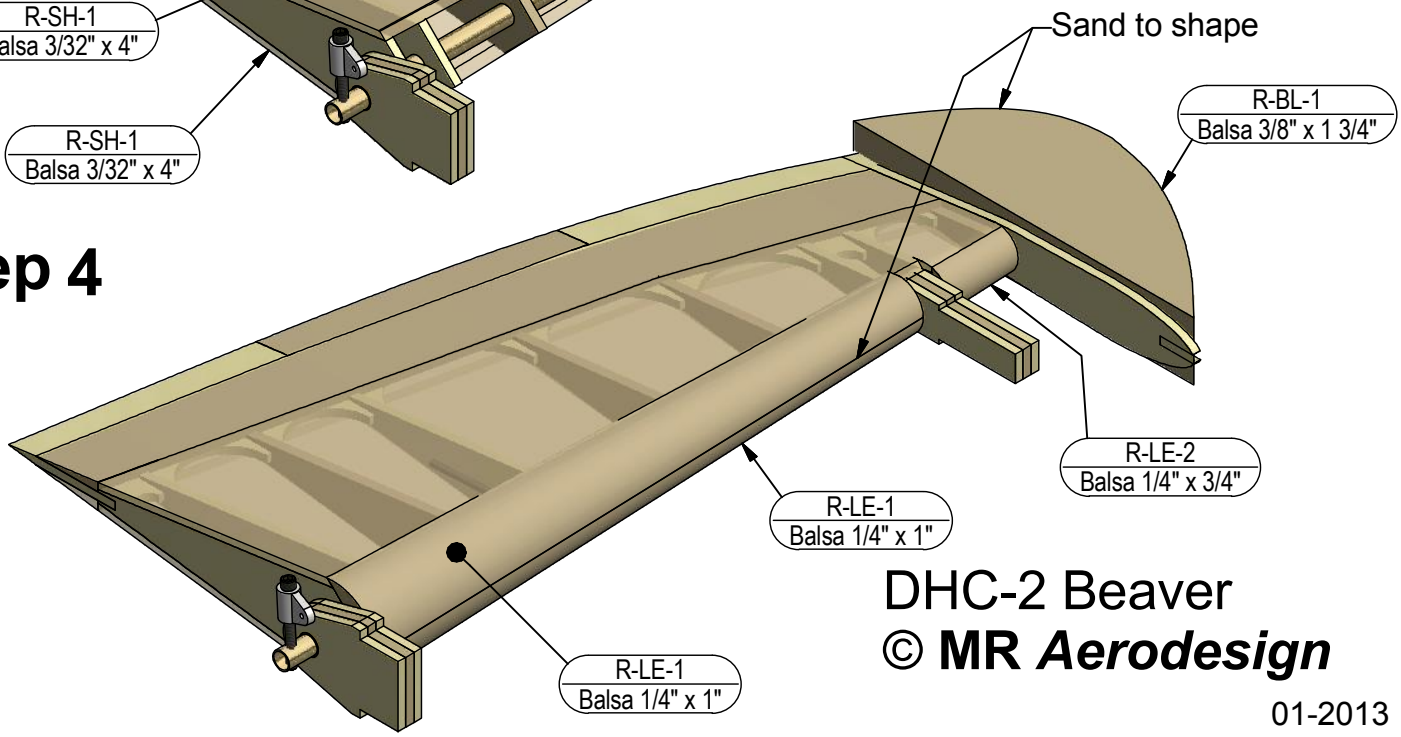

DHC-2 Beaver

© **MR *Aerodesign***

01-2013

Horizontal Stabilizer

Horiz. Stab. Parts List			Horiz. Stab. Parts List		
Part number	Material	Qty	Part number	Material	Qty
S-LE-1	Balsa 3/32" x 1/2"	2	S14	Ply 1/8"	8
S-LE-2	Balsa 1/4" x 3/4"	2	S1A	Ply 1/8"	2
S-MS-1	Balsa 1/8" x 1/4"	4	S2	Balsa 1/8"	2
S-SH-1	Balsa 3/32" x 4"	1	S3	Balsa 1/8"	2
S-SH-1	Balsa 3/32" x 4"	1	S4	Balsa 1/8"	2
S-TE-1	Balsa 1/4" x 1"	2	S5	Balsa 1/8"	2
S1	Balsa 1/8"	1	S6	Balsa 1/8"	2
S10	Balsa 1/8"	2	S7	Balsa 1/8"	2
S11	Balsa 1/8"	2	S8	Balsa 1/8"	2
S12	Balsa 1/8"	2	S9	Balsa 1/8"	2
S13	Ply 1/8"	4			

Step 1

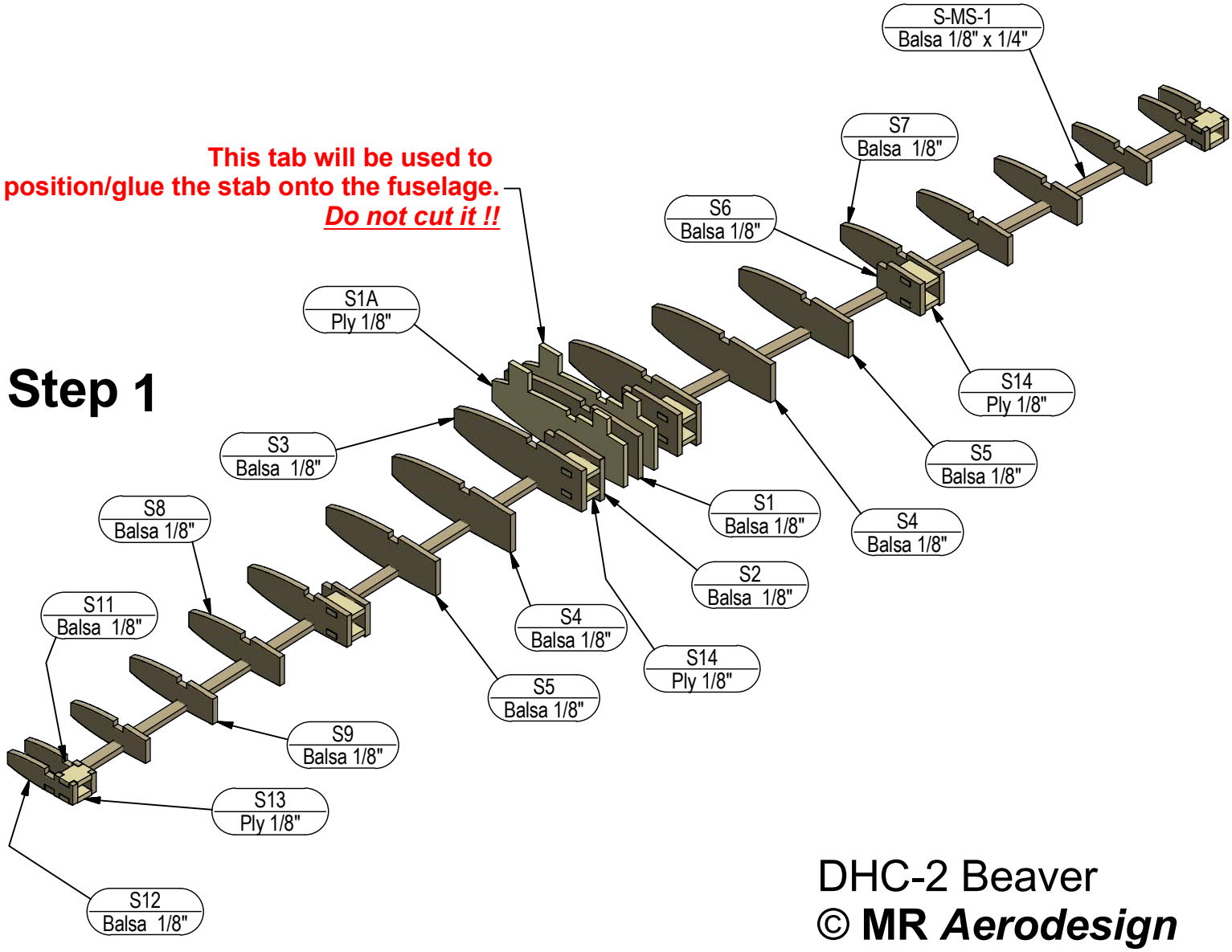

DHC-2 Beaver

© MR *Aerodesign*

Horizontal Stabilizer

Step 2

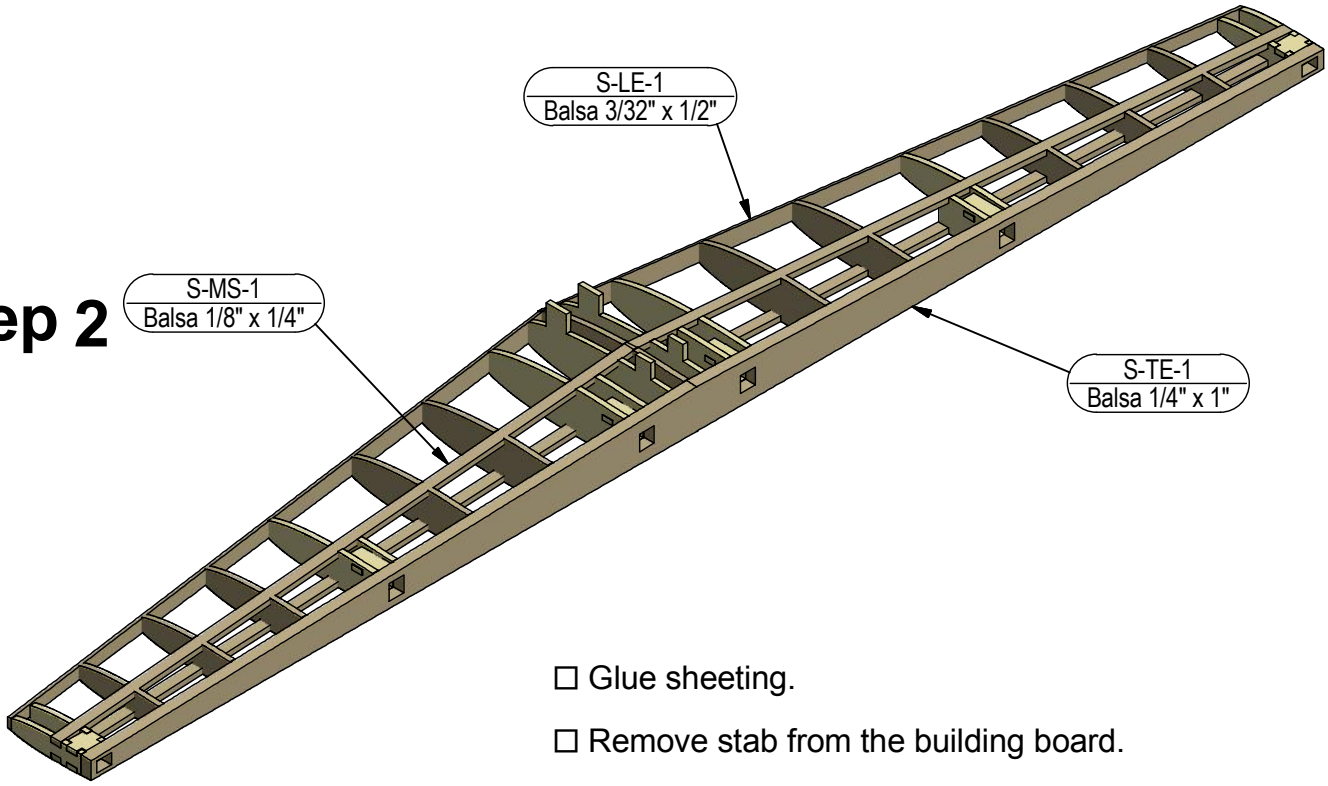

- ☐ Glue sheeting.
- ☐ Remove stab from the building board.
- ☐Cut tab. **(Except S1A)**
- ☐Glue sheeting on the other side.

Step 3

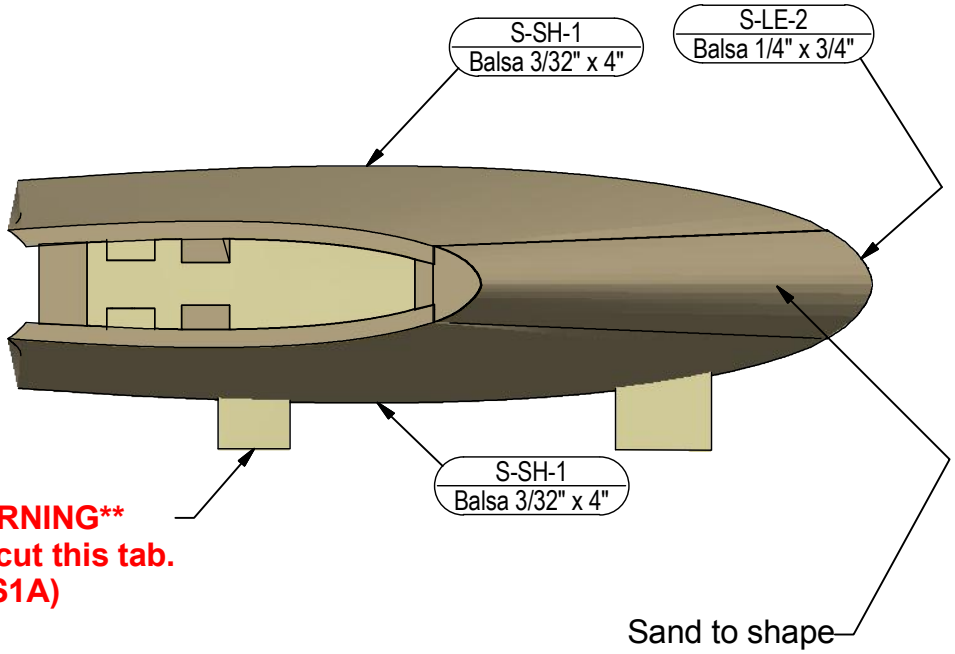

DHC-2 Beaver

© **MR *Aerodesign***

Elevator

Parts List (For 1 elevator)			Parts List (For 1 elevator)		
Part number	Material	Qty	Part number	Material	Qty
DUB557	Nylon horn bracket	1	E12	Ply 1/8"	1
E-BL-1	Balsa 1/4" x 1 1/8"	2	E13	Balsa 1/8"	1
E-HI-1-BU	Brass tube Ø9/32" (O.D.)	1	E14	Balsa 1/8"	1
E-HI-2-BU	Brass tube Ø5/32" (O.D.)	2	E15	Ply 1/8"	2
E-LE-1	Balsa 1/8" x 1/4"	2	E16	Balsa 3/32"	1
E-LE-2	Balsa 3/32" x 1/4"	2	E17	Ply 1/8"	2
E-LE-3	Balsa 1/4" x 1"	1	E18	Balsa 3/32"	1
E-LE-4	Balsa 1/8" x 3/4"	1	E19	Balsa 3/32"	1
E-LE-5	Balsa 3/32" x 1/2"	1	E2	Ply 1/8"	1
E-LE-6	Balsa 1/4" x 1/2"	1	E20	Ply 1/8"	2
E-S-1	Balsa 1/8" x 1/4"	2	E3	Ply 1/8"	1
E-SH-1	Balsa 1/16" x 4"	2	E4	Balsa 3/32"	1
E-TE-1	Balsa 1/4" x 3/4"	1	E5	Ply 1/8"	1
E-TU-1	Brass tube Ø1/4" (O.D.)	1	E6	Ply 1/8"	1
E-TU-2	Brass tube Ø1/8" (O.D.)	2	E7	Balsa 3/32"	1
E1	Ply 1/8"	1	E8	Balsa 3/32"	1
E10	Ply 1/8"	1	E9	Balsa 3/32"	1
E11	Balsa 3/32"	2	SHCS4-016	SHCS 4-40 x 1" lg.	1

Step 1

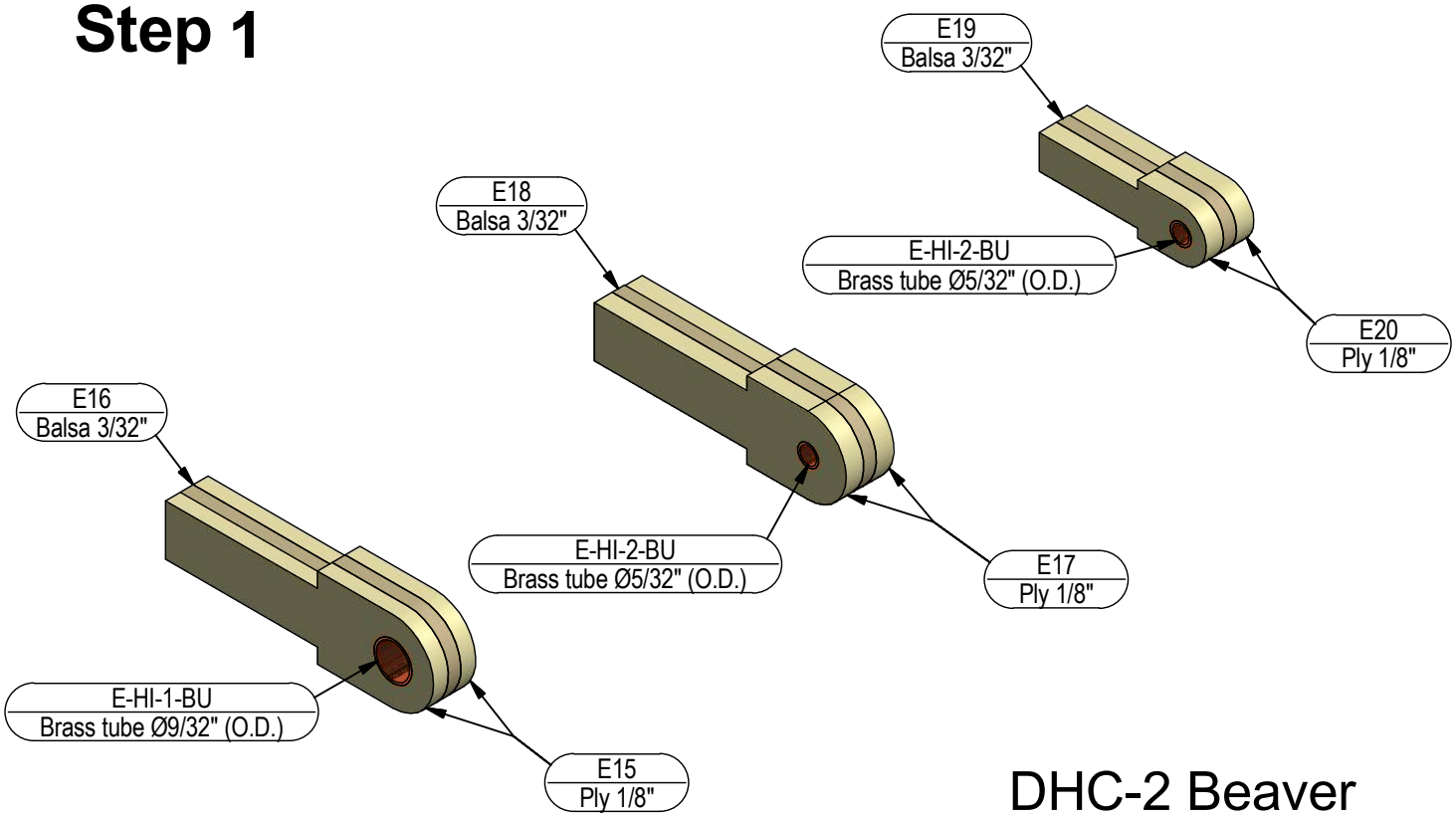

DHC-2 Beaver

© **MR *Aerodesign***

01-2013

Elevator

Step 2

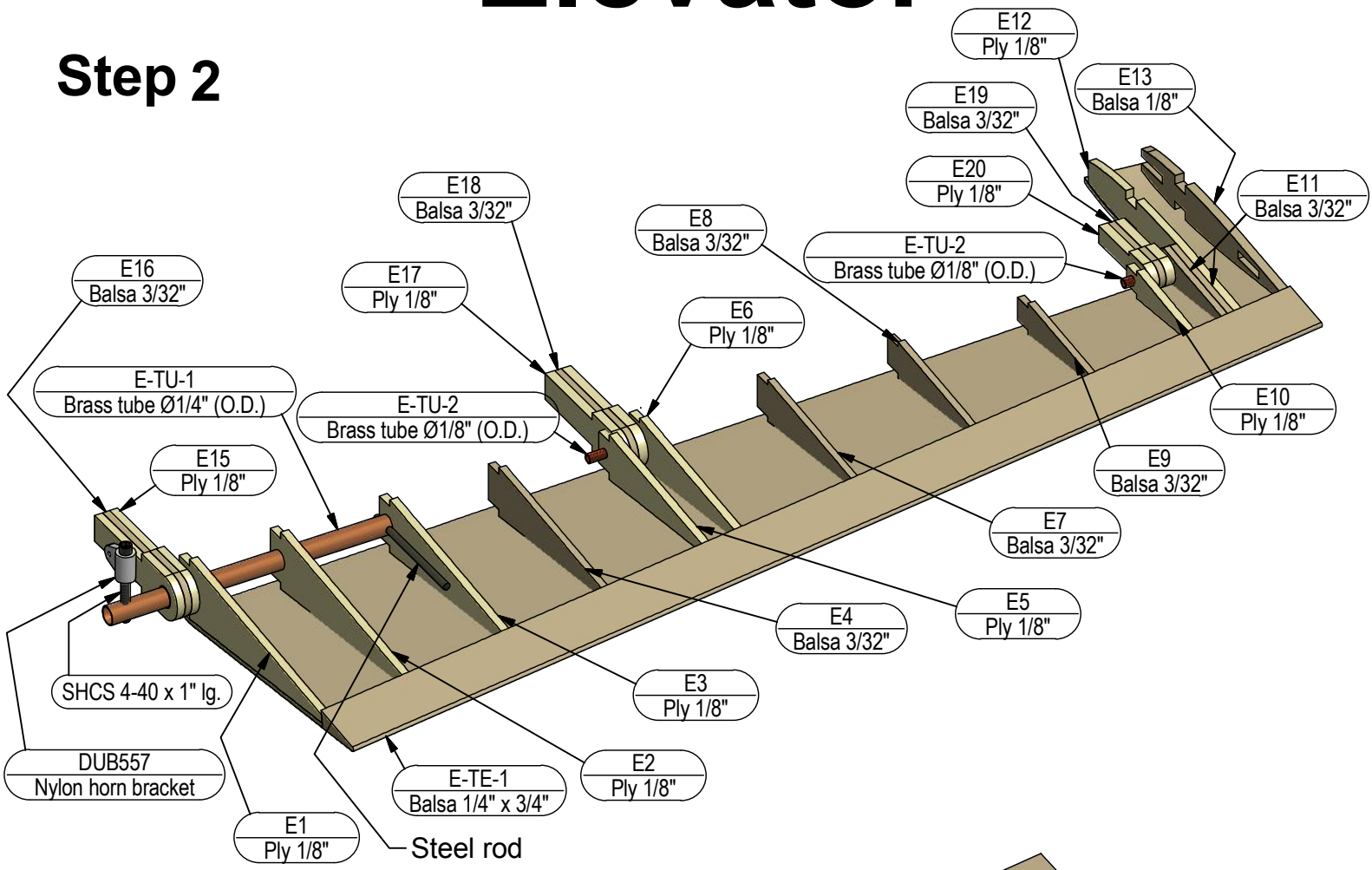

Step 3

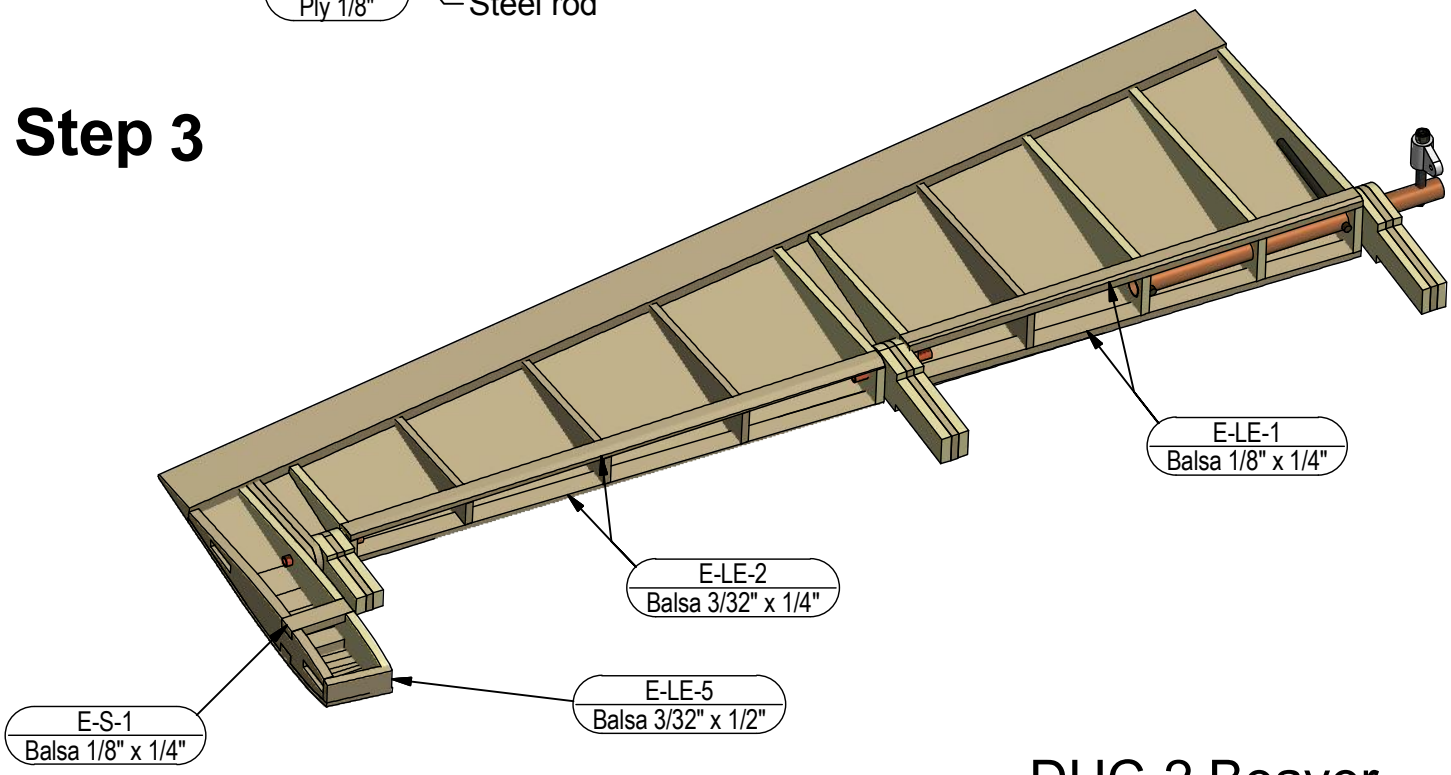

DHC-2 Beaver

© **MR *Aerodesign***

01-2013

Elevator

Step 4

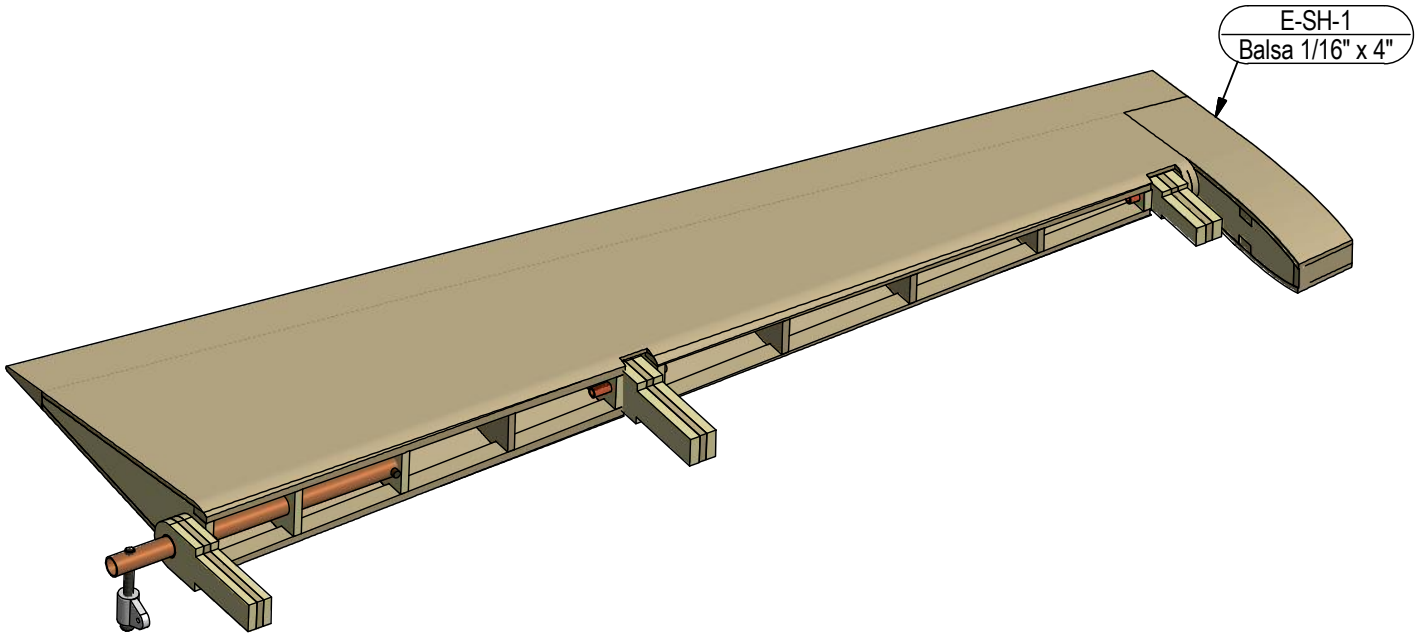

Step 5

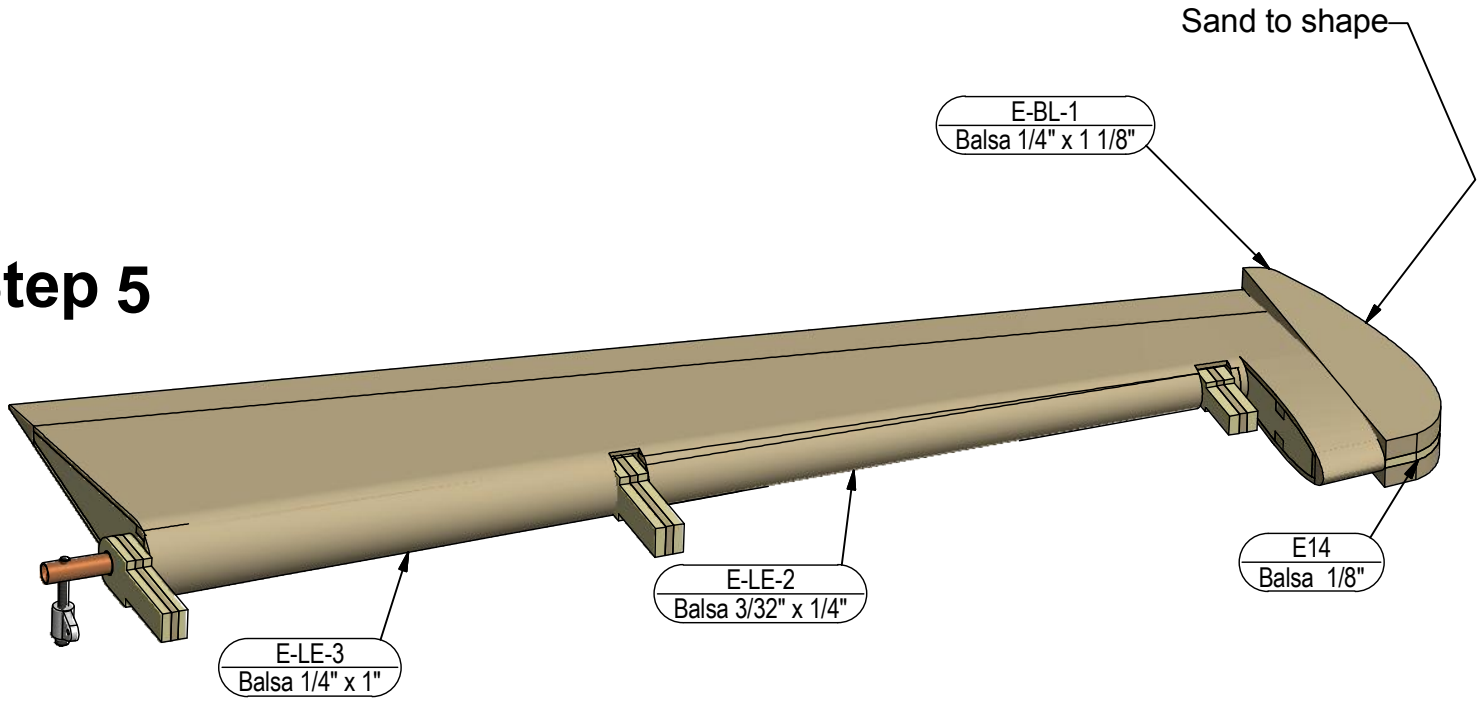

DHC-2 Beaver

© **MR *Aerodesign***

FUSELAGE

Fuselage Parts List			Fuselage Parts List		
PART NUMBER	DESCRIPTION	QTY	PART NUMBER	DESCRIPTION	QTY
DUB102	NY-Steel Kiwk-rod ass'y	3	FA	Ply 1/8"	2
DUB202	Steel Strap	2	FAAD	Ply 1/8"	2
DUB450RV	Ø4 1/2" wheel	2	FB	Ply 1/8"	2
Door Hinge	Door Hinge	8	FD	Ply 1/8"	1
Dowel-1	Dowel Ø3/8"	8	FE1	Ply 1/8"	1
F-CS-1	Steel rod Ø1/8" x 12"	2	FE2	Ply 1/8"	1
F-ST-01	Balsa 1/4" x 1/4"	2	FE3	Ply 1/8"	1
F-ST-02	Balsa 1/4" x 1/4"	5	FE4	Ply 1/8"	1
F-ST-02D	Balsa 1/4" x 1/4"	1	FF	Ply 1/8"	1
F-ST-03	Balsa 1/4" x 1/4"	1	FG	Ply 1/8"	2
F-ST-03D	Balsa 1/4" x 1/4"	1	FH	Ply 1/8"	2
F-ST-04	Balsa 1/4" x 1"	2	FI	Ply 1/8"	2
F-ST-05	Balsa 1/4" x 1 1/2"	2	FIA	Ply 1/8"	1
F-ST-06	Balsa 1/4" x 1 1/2"	2	FJ	Ply 1/8"	1
F-ST-07	Balsa 1/4" x 1 1/2"	2	FK	Ply 1/8"	1
F-ST-08	Balsa triangle 1/2"	2	FL	Ply 1/8"	2
F-ST-09	Balsa triangle 1/2"	1	FM	Ply 1/8"	1
F-STR-1	Hardwood 1/4" x 1/2"	2	FN-A	Balsa 1/8"	1
F-STR-2	Hardwood 1/4 x 3/8	2	FN-B	Balsa 1/8"	1
F-STR-3	Hardwood 1/4" x 1/2"	2	FN-C	Balsa 1/8"	1
F1	Ply 1/4"	1	FO	Ply 1/8"	2
F10A	Balsa 1/8"	1	FP	Ply 1/8"	2
F10B	Balsa 1/8"	2	FW-4	Ply 1/4"	3
F10L	Ply 1/8"	1	FW-5	Dowel Ø1/2"	2
F10R	Ply 1/8"	1	FW-6	Dowel Ø1/2"	1
F11L	Ply 1/8"	1	FW1	Ply 1/4"	1
F11R	Ply 1/8"	1	FW2	Ply 1/4"	2
F12L	Ply 1/8"	1	FW3	Ply 1/4"	1
F12R	Ply 1/8"	1	Gear-assy-left	Gear leg ass'y (Left hand)	1
F13	Ply 1/8"	2	Gear-assy-right	Gear leg ass'y (Right hand)	1
F14	Ply 1/8"	2	Handle	Door handle	4
F15	Ply 1/8"	2	Horn-long	Servo Horn	1
F16	Ply 1/8"	2	PH-T	Phenolic tube Ø5/8" I.D.	1
F17	Ply 1/8"	1	SS2-07	Servo Screw #2x7/16"	28
F18	Ply 1/8"	1	Servo	1/4 scale servo	1
F19	Ply 1/8"	1	Servo-tray	Servo tray	2
F2	Ply 1/8"	1	UCD-1	Front main gear bracket	1
F22	Balsa 1/8"	4	UCD-2	Rear main gear bracket	2
F23	Ply 1/4"	2	Wing tube	Alum. tube Ø5/8" O.D.	1
F3	Ply 1/8"	2	DHC2-TWB	Tail wheel bellcrank kit	1
F4	Ply 1/8"	2	DUB243	Wheel collar Ø7/32"	4
F5	Ply 1/8"	1	Tail wheel	Tail wheel ass'y	1
F6	Ply 1/8"	1	SHCS4-016	SHCS 4-40 x 1" lg.	3
F7	Ply 1/8"	3	Nylock Nut	Nylock Nut 4-40	5
F9	Balsa 1/8"	1	SH 4-40 x 1/2	SHCS 4-40 x 1/2" lg.	2
F9A	Ply 1/8"	1			

FUSELAGE

- ☐ Before you start, glue parts F3, F4 and F7 together.
- ☐ Glue F10B on F10. (Note that there is a right-hand assembly and a left-hand assembly)

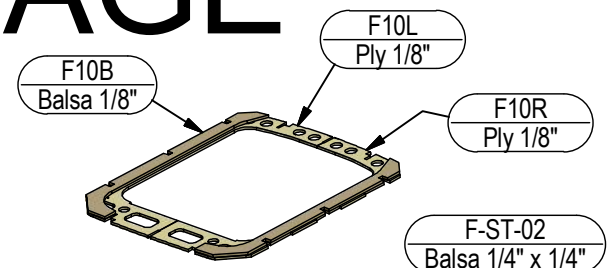

Step 1

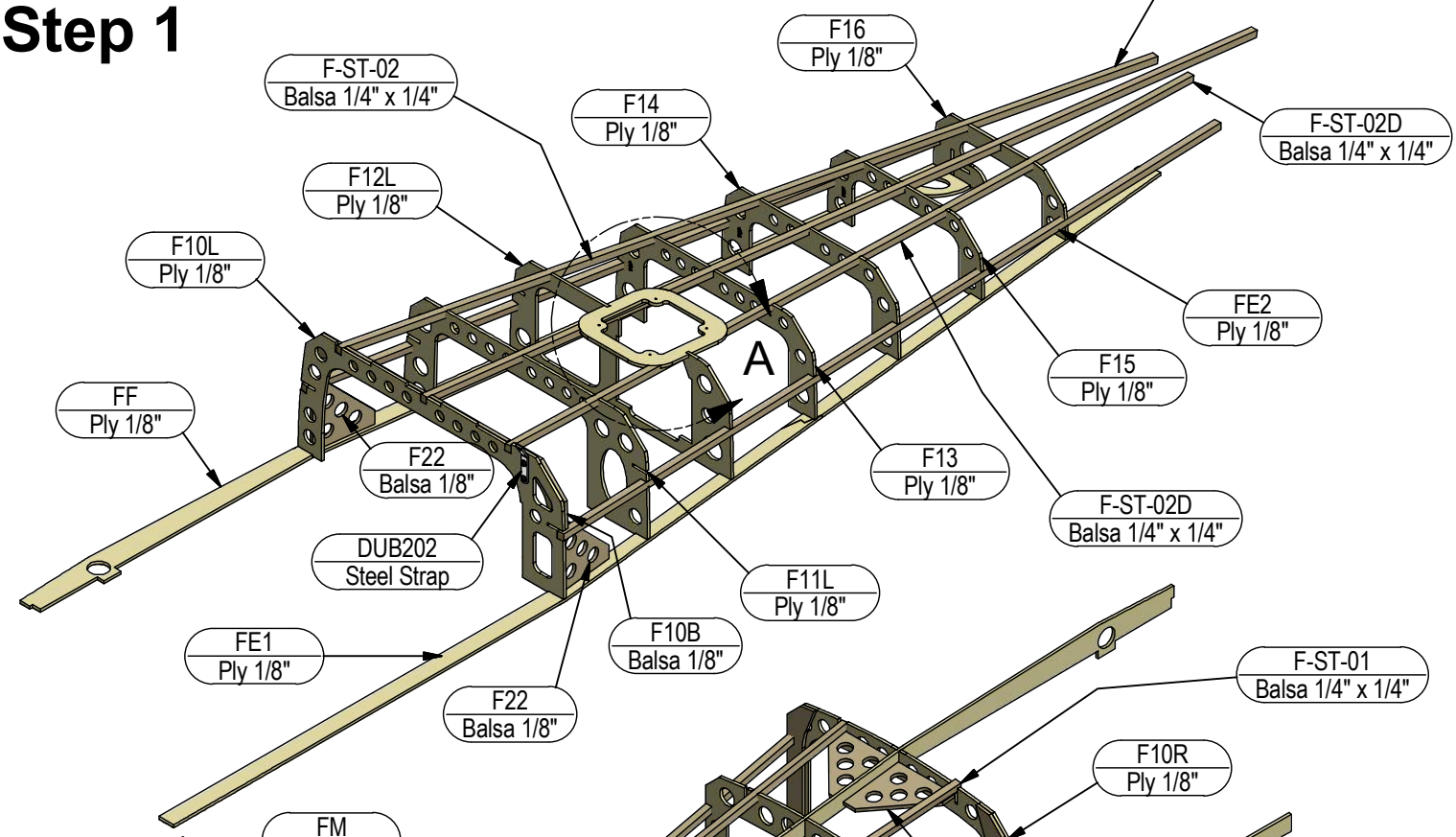

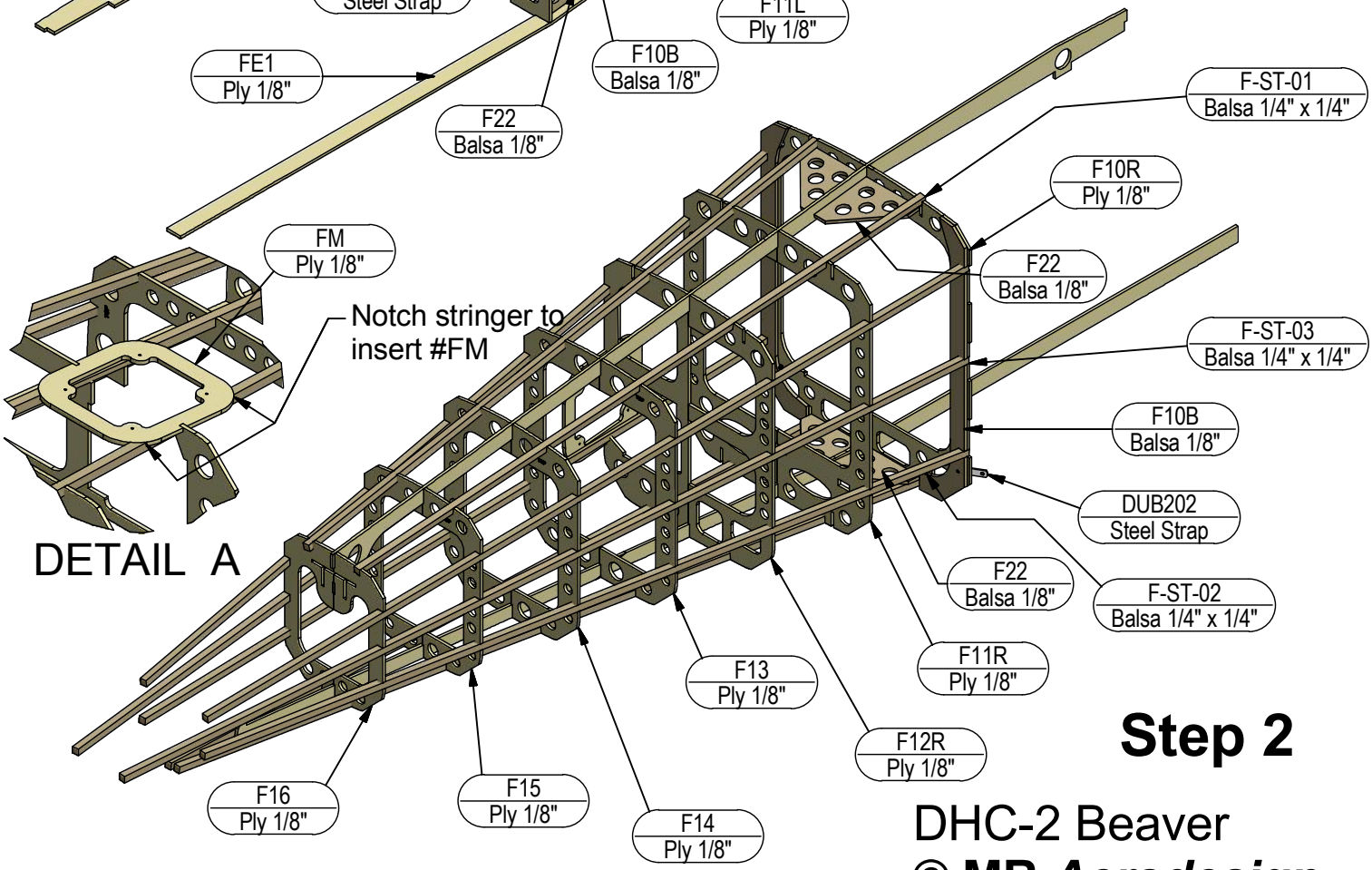

Step 2

DHC-2 Beaver

© **MR *Aerodesign***

01-2013

Tail support ass'y

Step 3

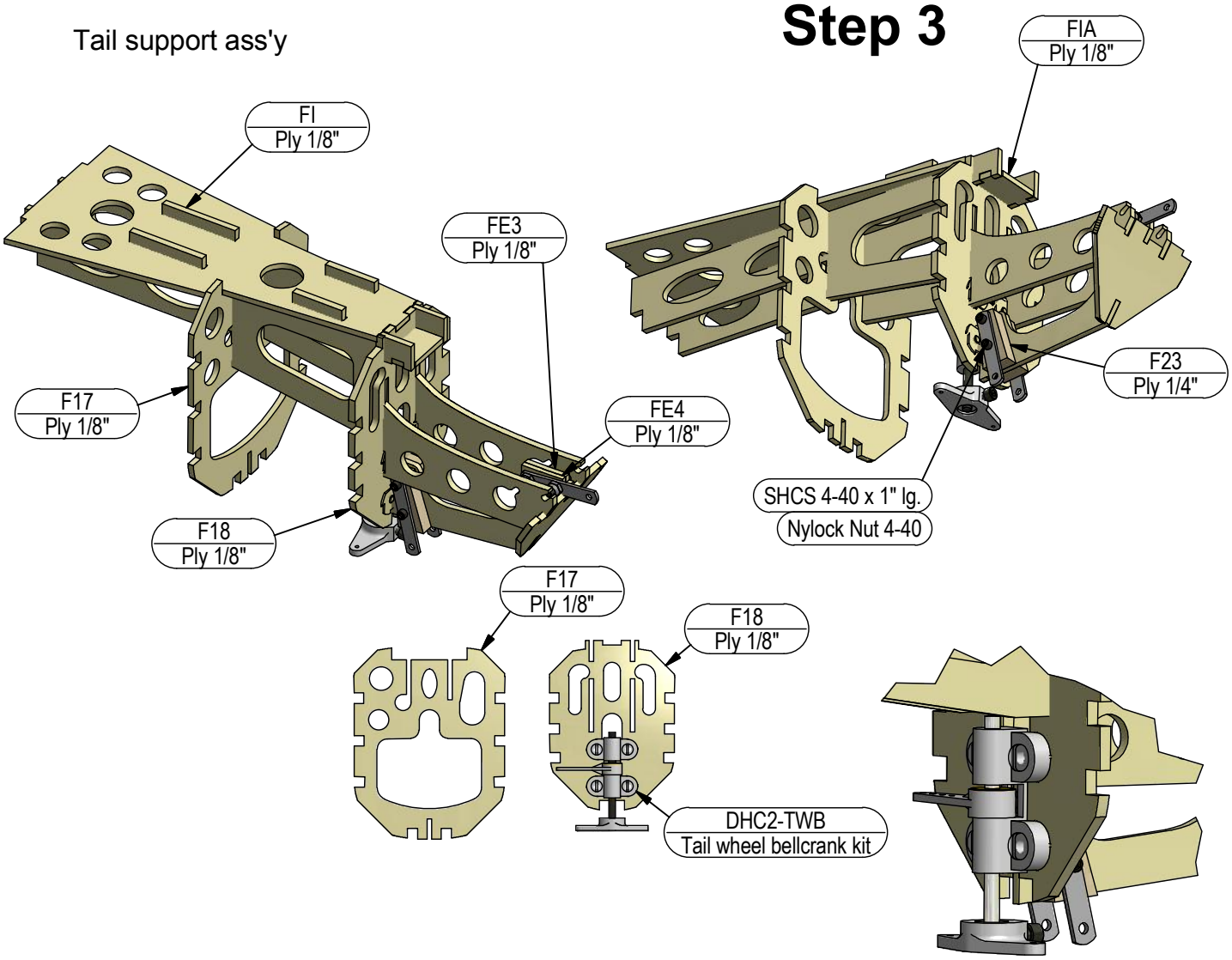

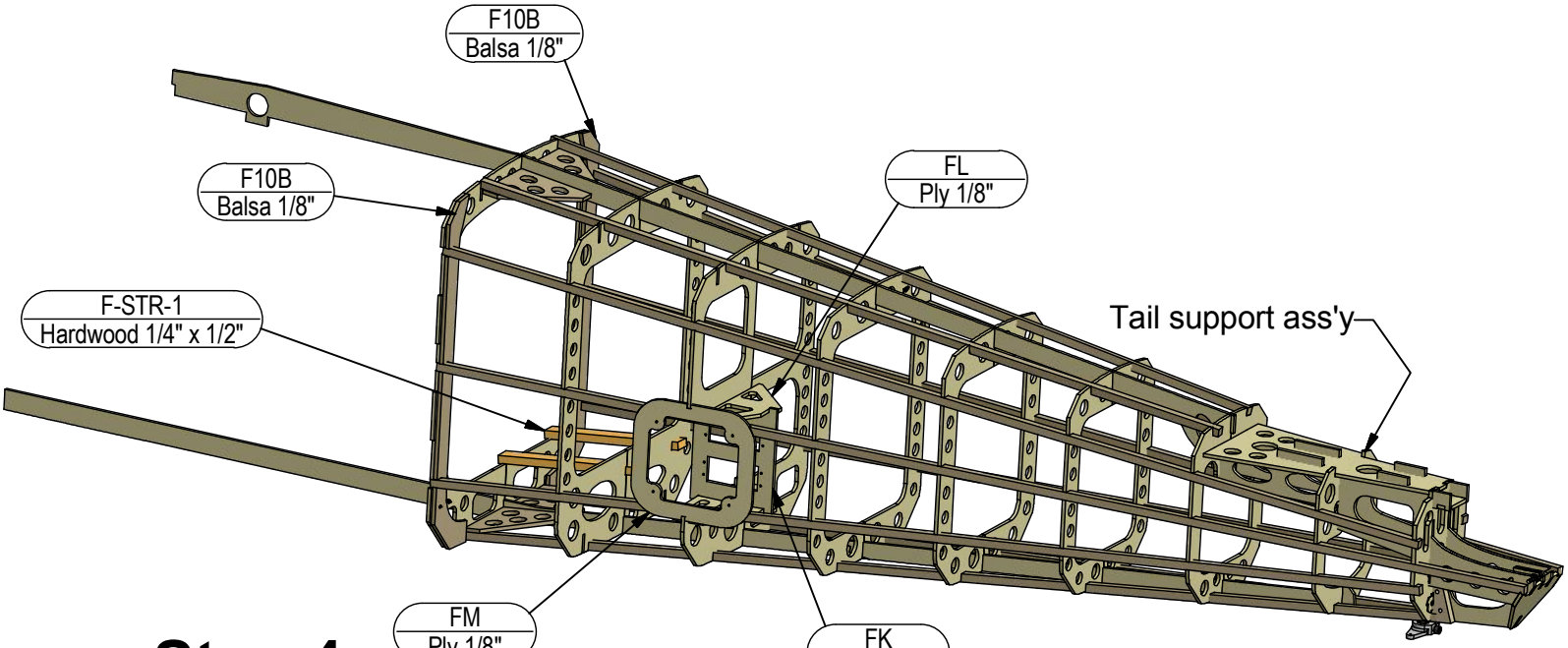

Step 4

DHC-2 Beaver

© **MR *Aerodesign***

01-2013

Step 5

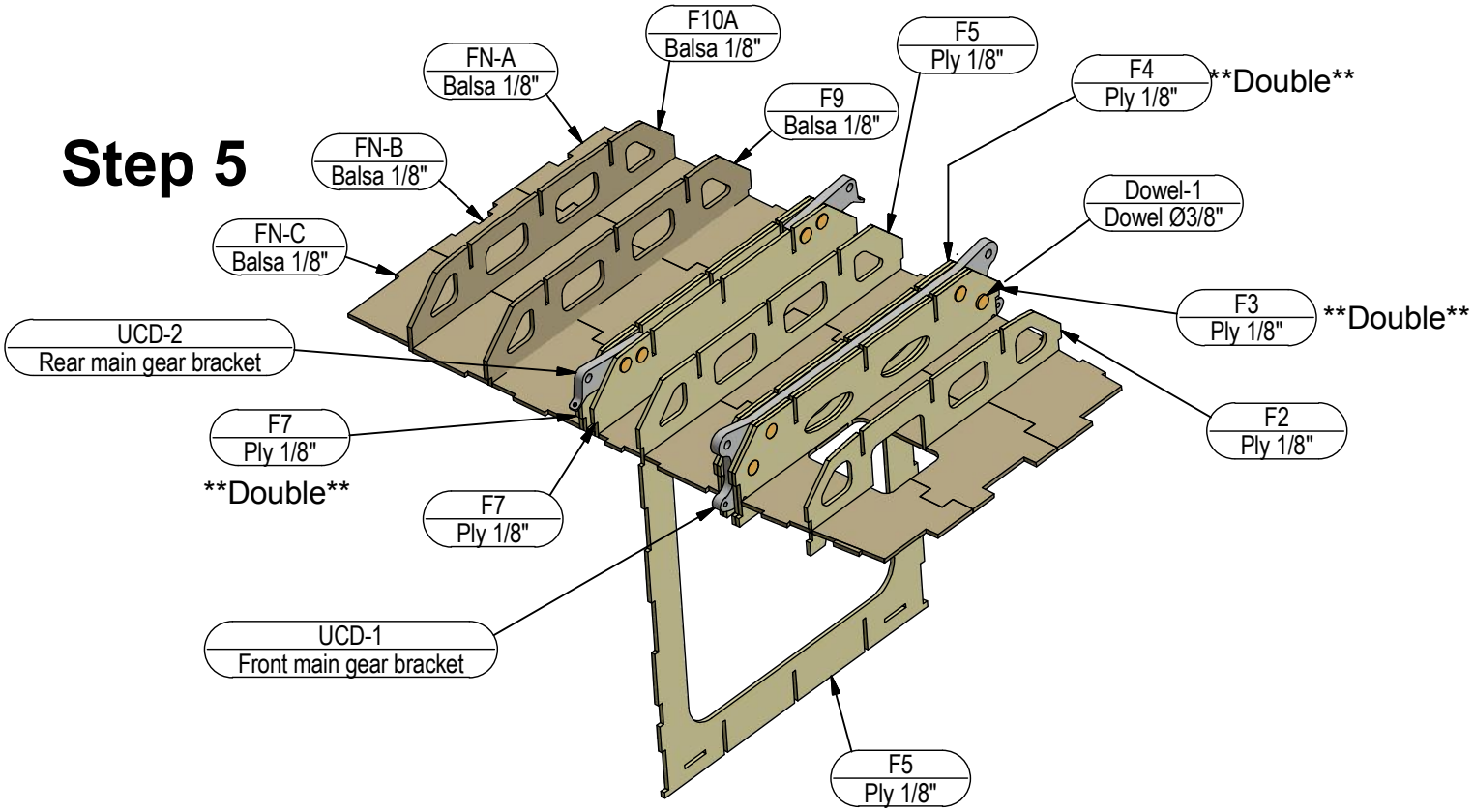

Step 6

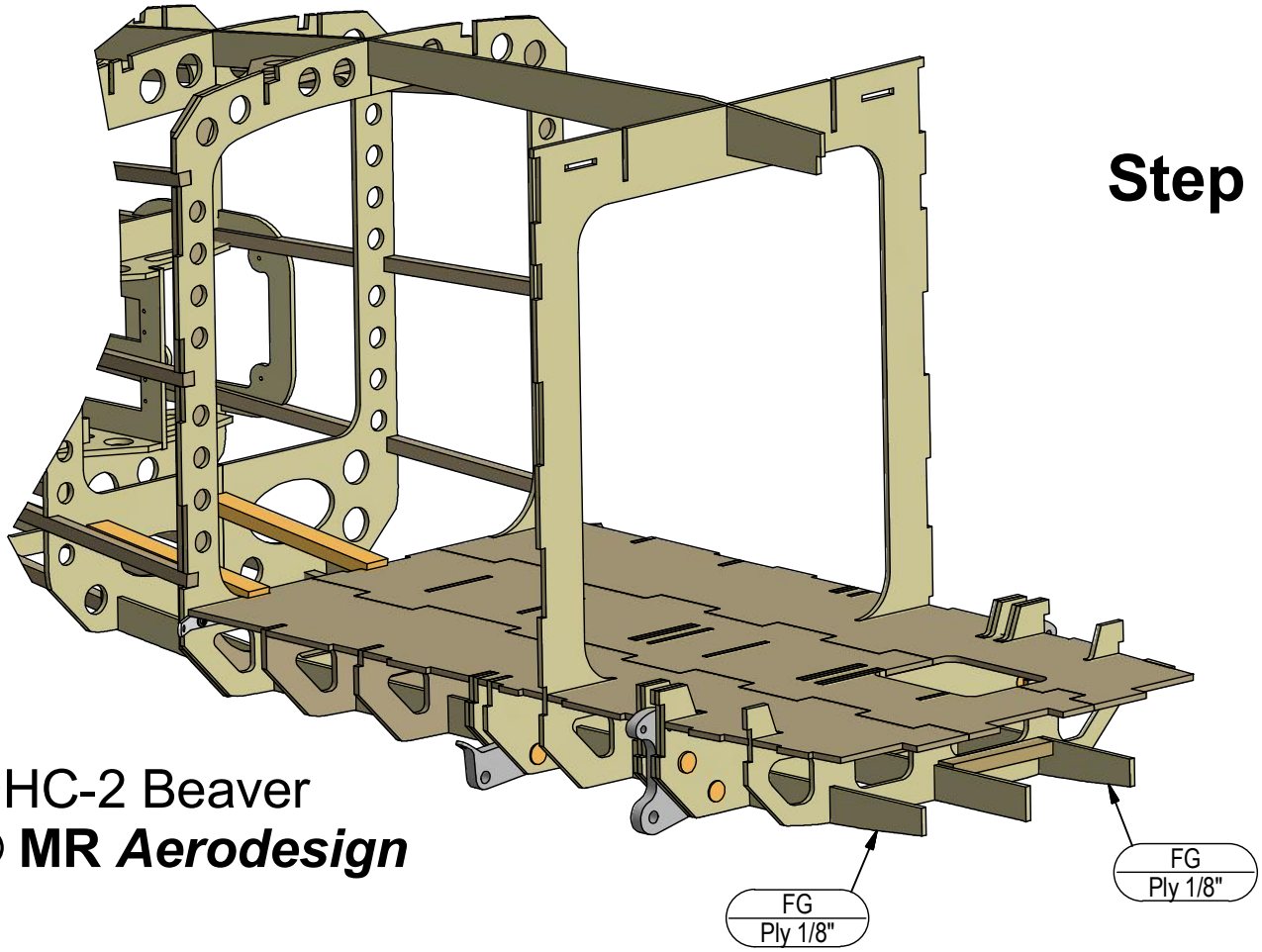

DHC-2 Beaver

© **MR *Aerodesign***

01-2013

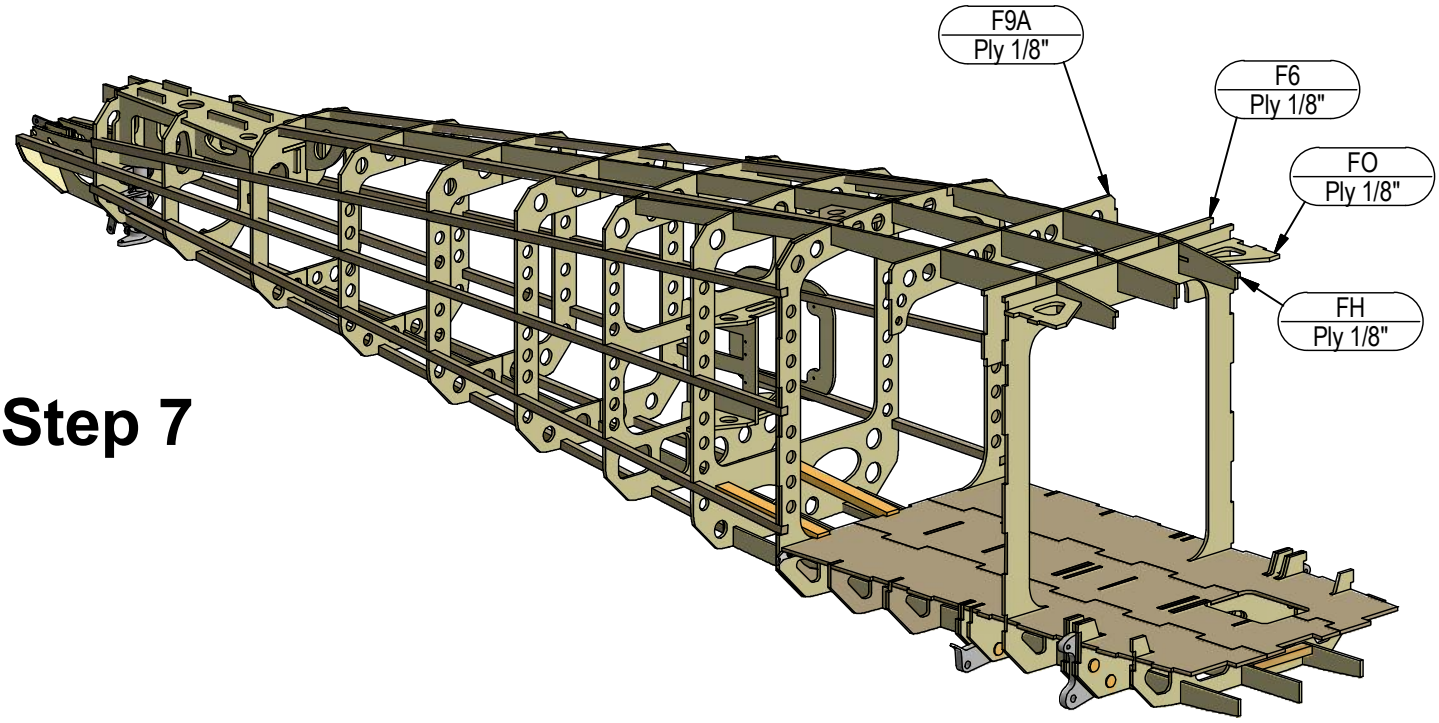

Step 7

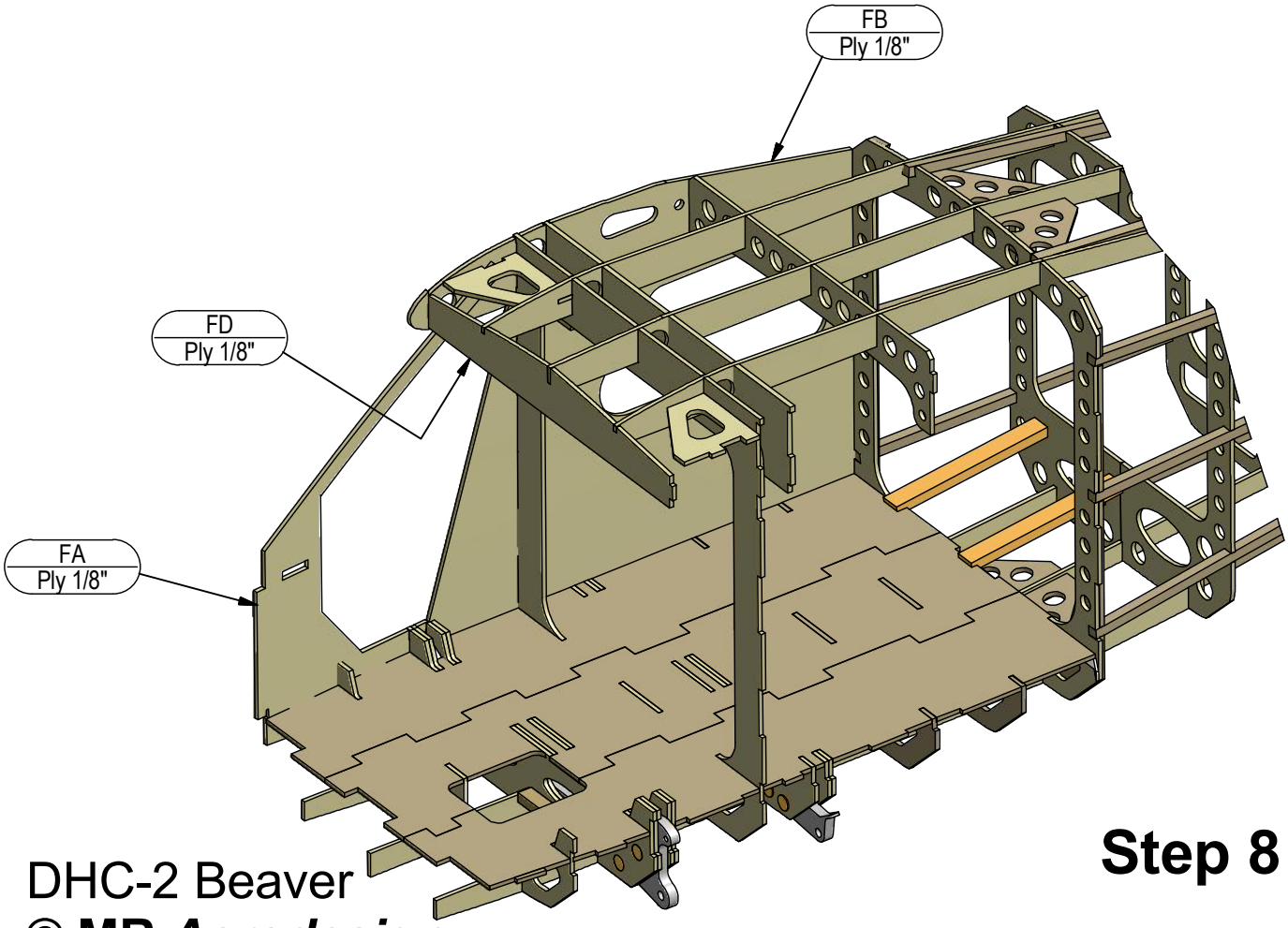

Step 8

DHC-2 Beaver

© **MR *Aerodesign***

Step 9

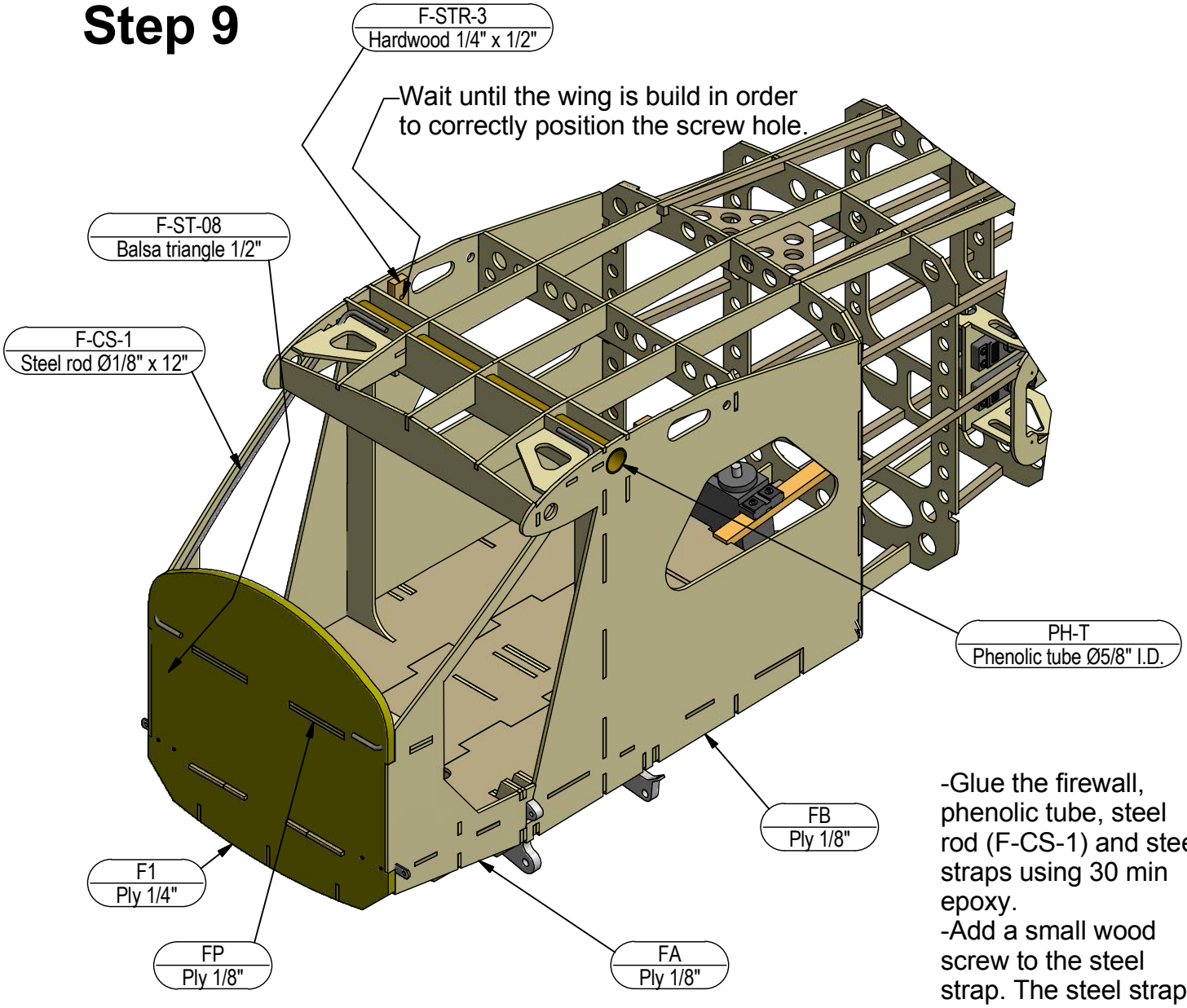

Double

-Glue the firewall, phenolic tube, steel rod (F-CS-1) and steel straps using 30 min epoxy.
-Add a small wood screw to the steel strap. The steel straps are for mounting the floats.

Step 10

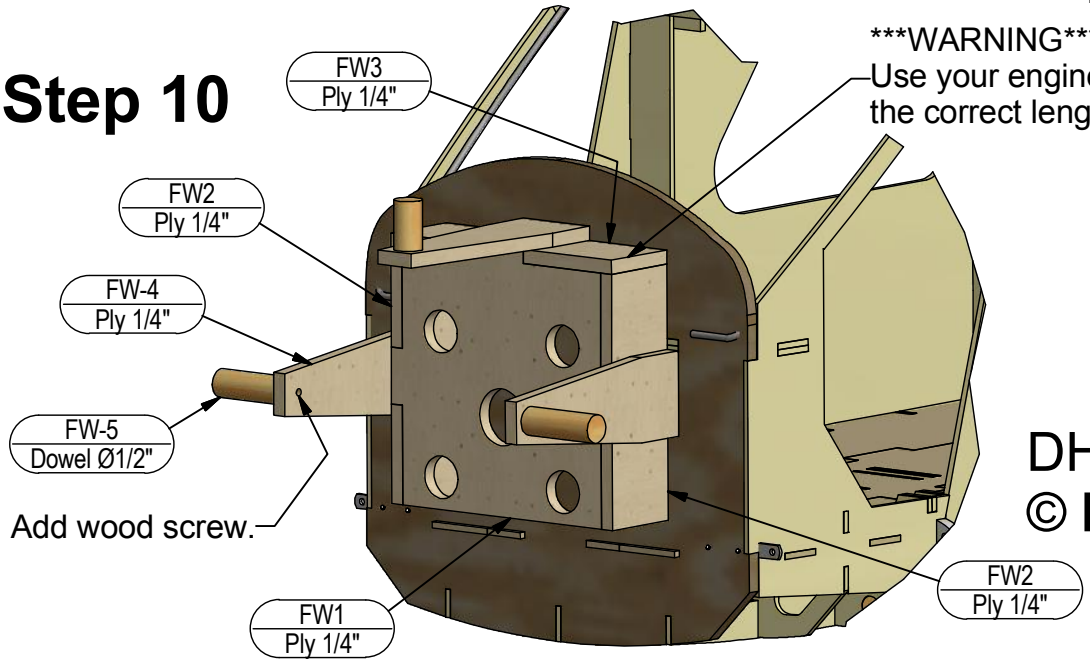

WARNING
Use your engine to determine the correct length of the box.

DHC-2 Beaver

© **MR *Aerodesign***

Step 11

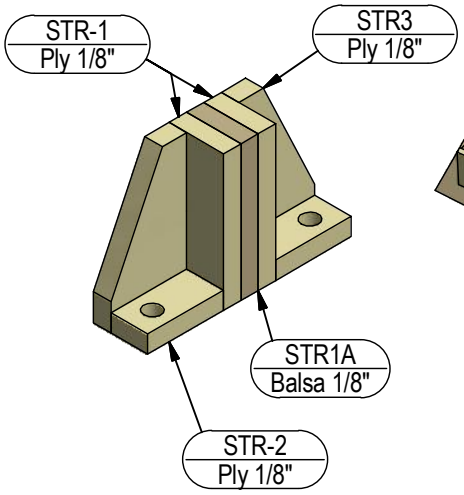

Servo tray
(2 req.)

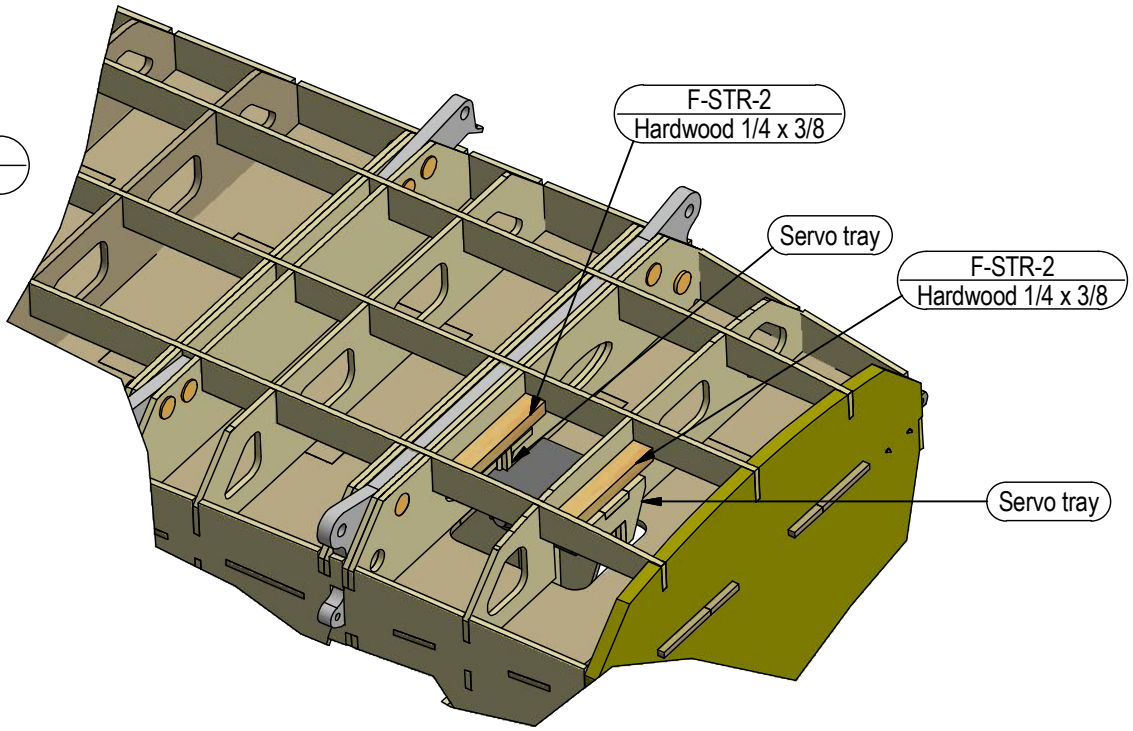

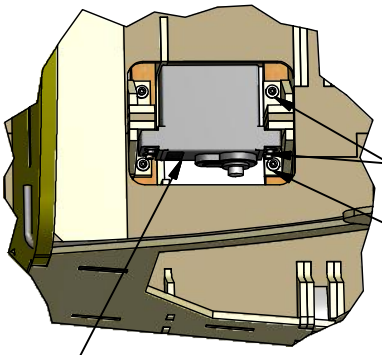

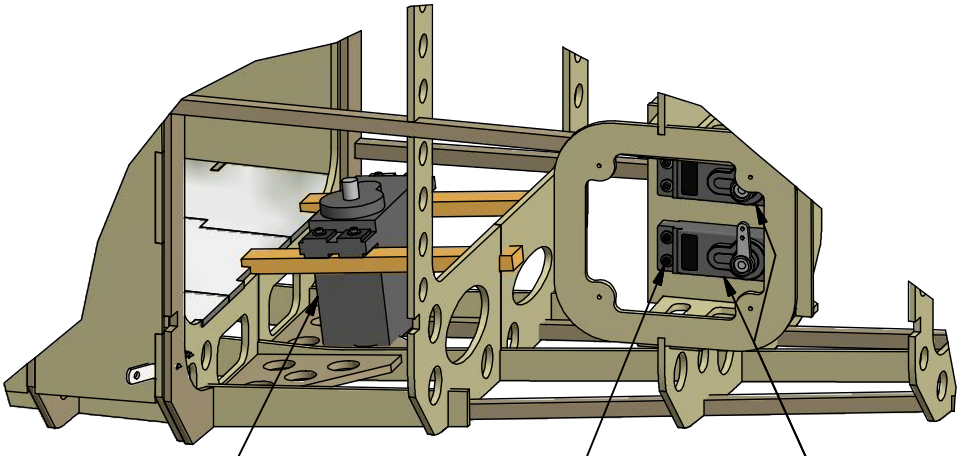

Step 12

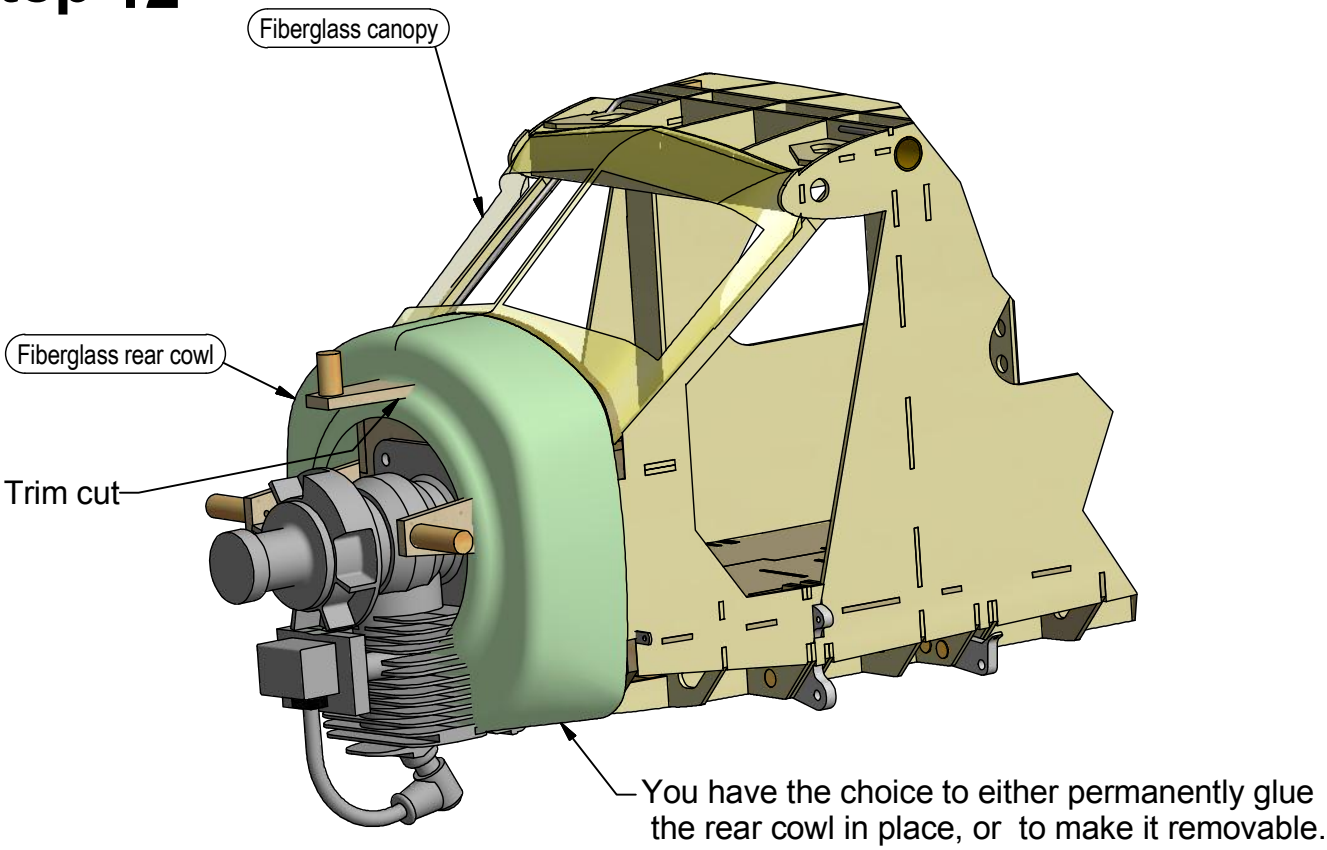

DHC-2 Beaver

© **MR *Aerodesign***

Step 13

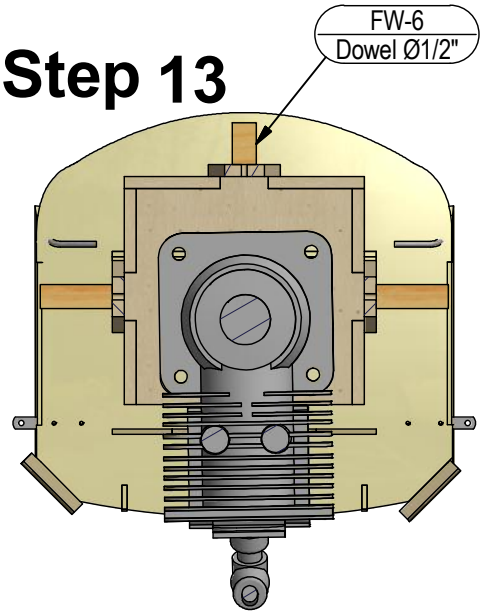

SECTION A-A

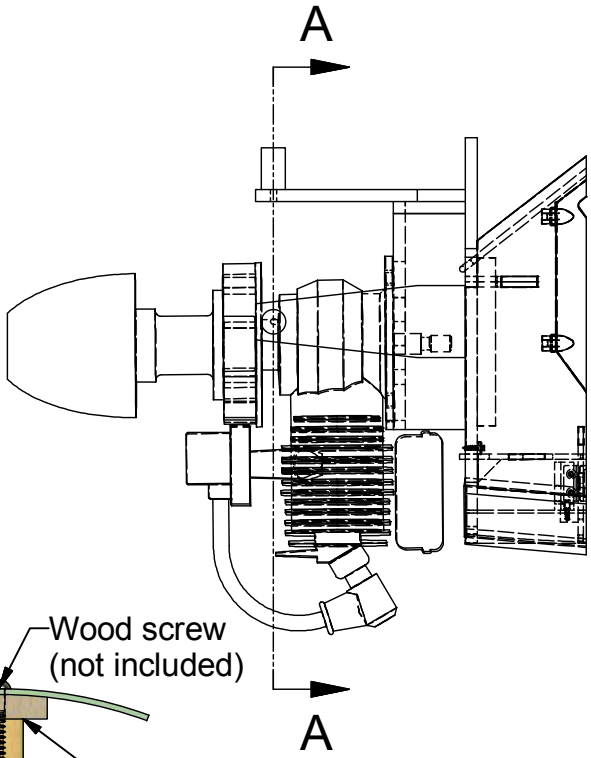

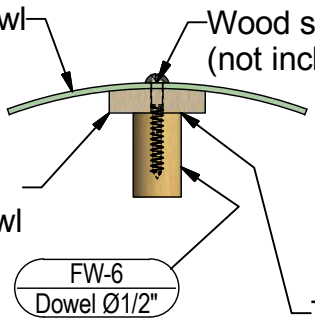

Step 14

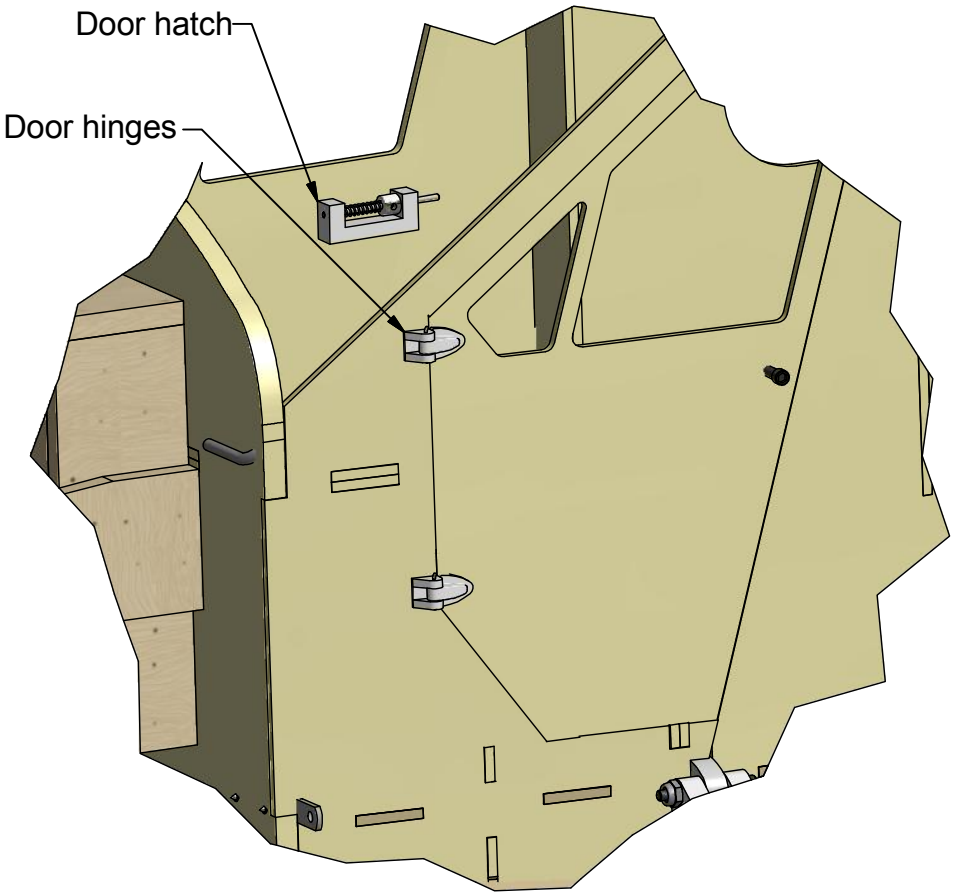

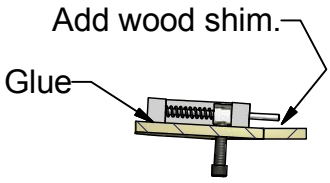

SECTION A-A

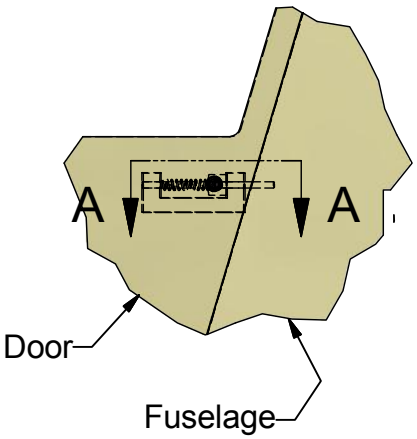

Step 15

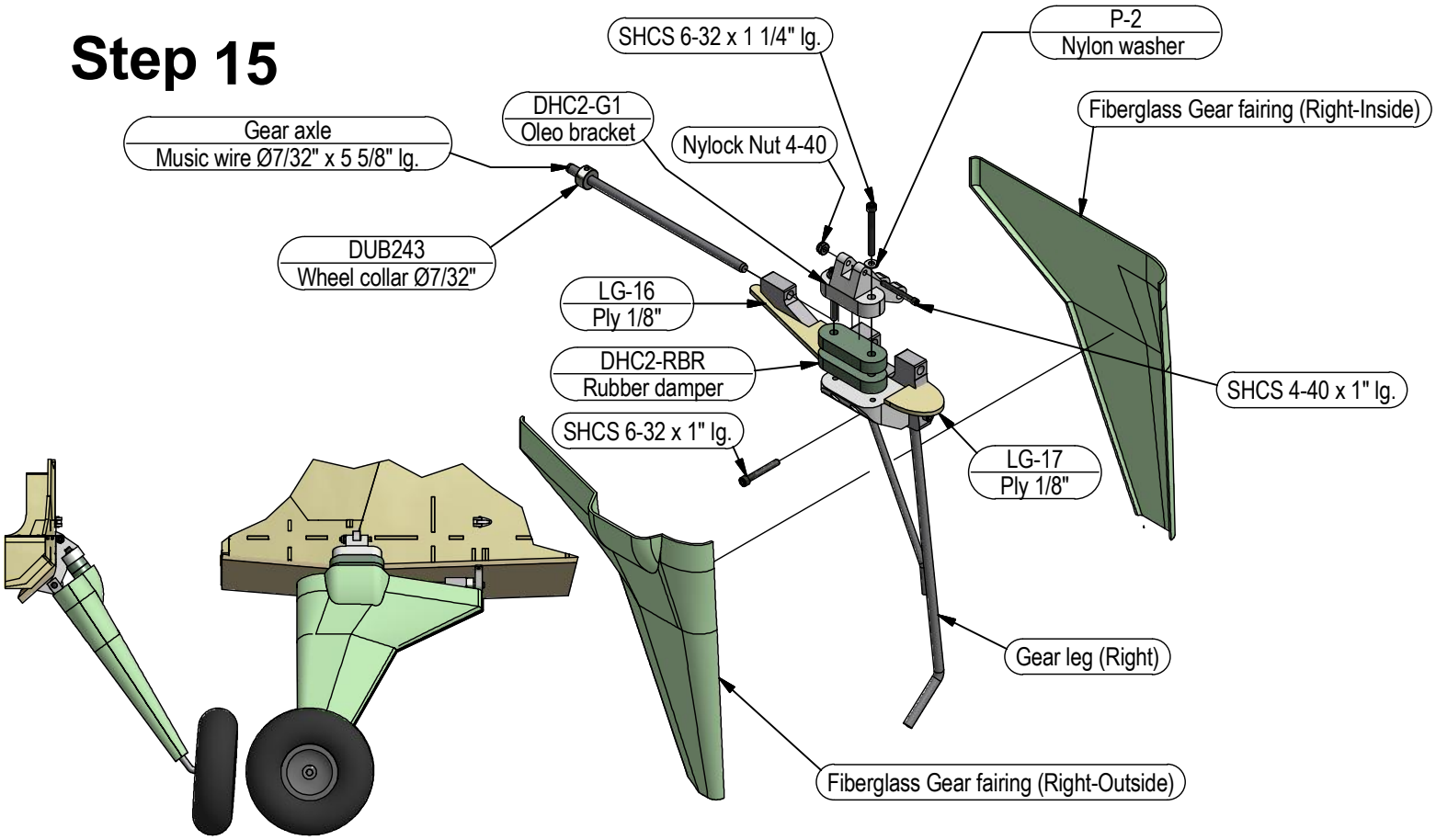

Step 16

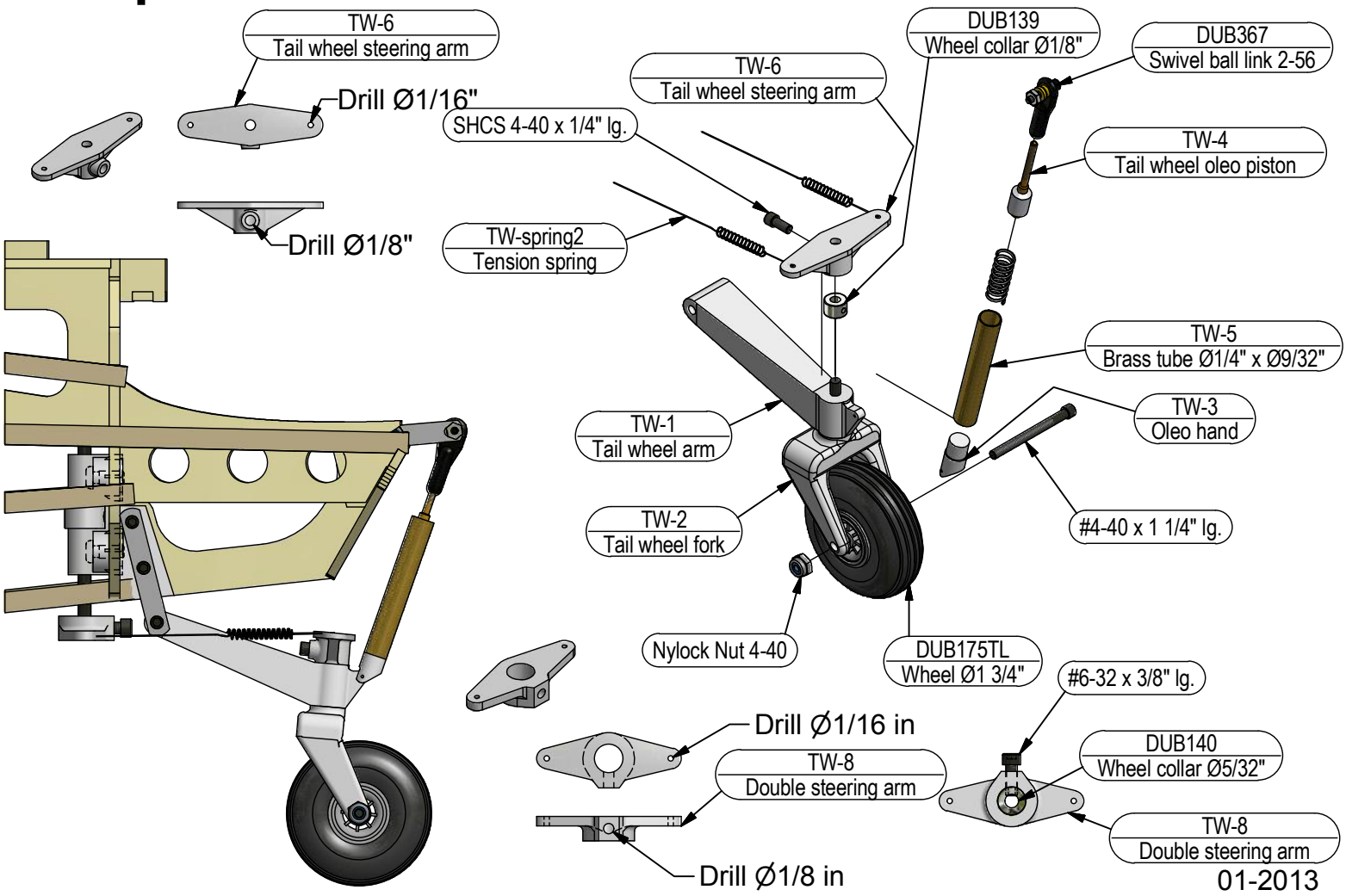

Step 17

-Glue Fin and Stab
on the fuselage.
-Make the dorsal fin.

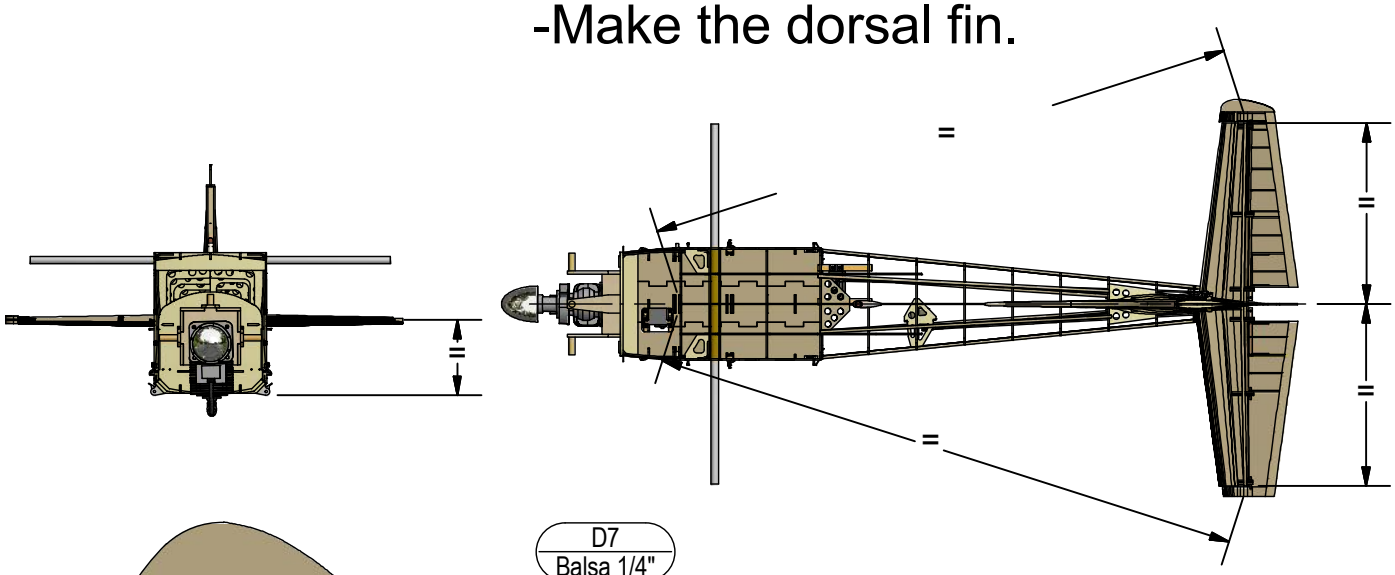

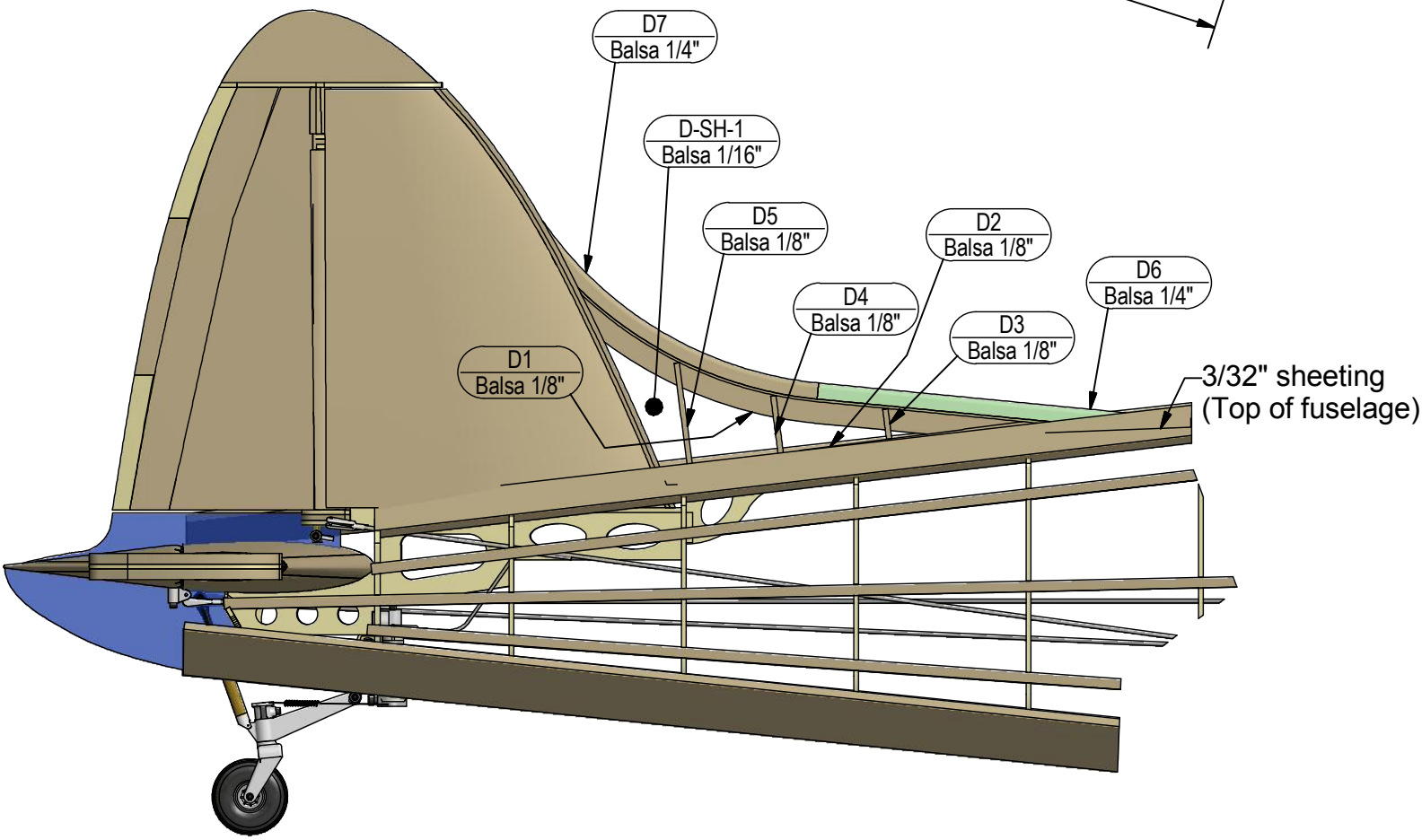

☐ Make sure that all your servo mechanisms for the rudder and elevator are made and work correctly.

☐ Put in a crossmember so as to have no play in the plastic elevator rod tub.

☐ Verify your tail wheel bellcrank setup one last time and make sure all screws are set with Loc-Tite

☐ Sheet the entire rear fuselage section. (F10 to F19)

☐ Use 1/4" balsa sticks to make the corners of the fuselage and sand to shape.

Flaps

Flap Parts List (1 flap)		
Part number	Material	Qty
FL-LE-2	Balsa 1/4" x 1/2"	1
FL-SH-2	Balsa 1/16" x 3"	1
FL-TE-1	Balsa 1/4" x 3/4"	1
FL1	Balsa 3/32"	12
FL2	Balsa 1/8"	3
FL4	Ply 1/8"	1
FL5	Ply 1/64"	6
FL6	Balsa 1/16"	1
Robart-01-125	Robart Hinge Ø1/8"	3

Step 1

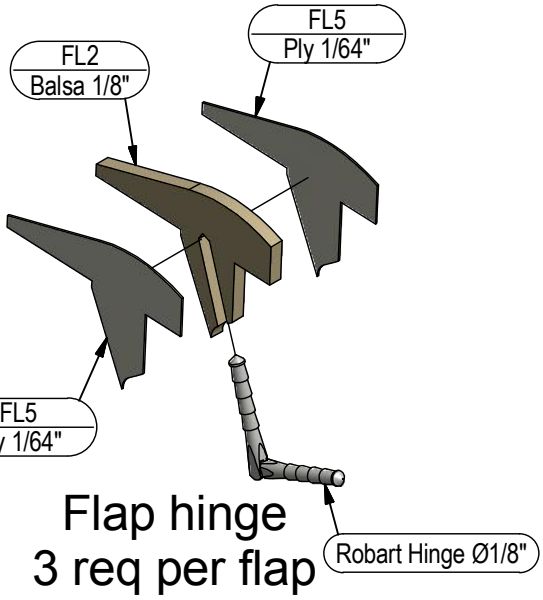

Step 2

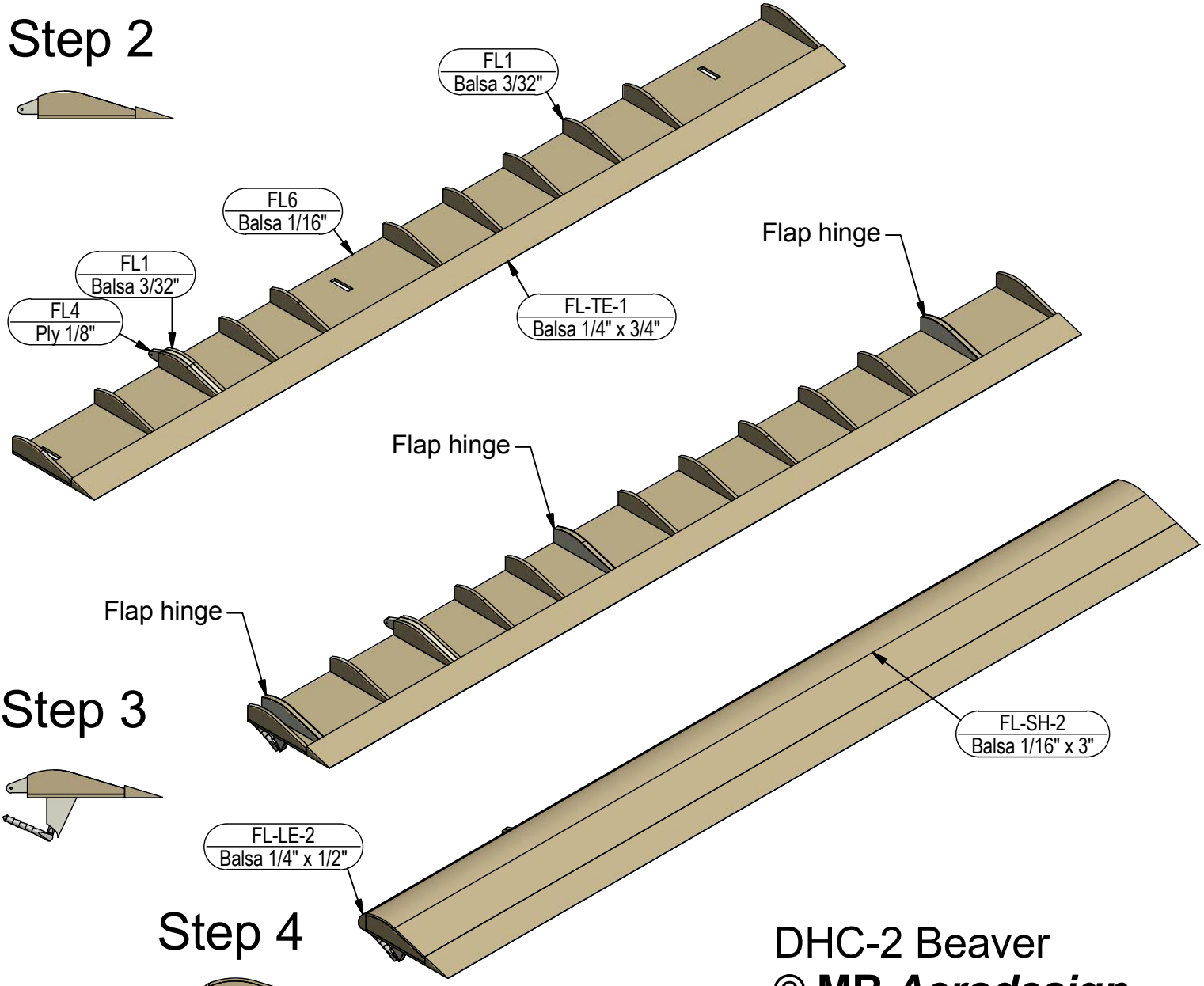

Step 3

Step 4

DHC-2 Beaver

© **MR *Aerodesign***

01-2013

Ailerons

Parts List		
PART NUMBER	DESCRIPTION	QTY
A1	Balsa 1/8"	3
A2	Ply 1/8"	1
A3	Balsa 3/32"	10
A4	Balsa 1/8"	2
A5	Ply 1/64"	6
A6	Balsa 1/16" x 3"	1
AI-LE-2	Balsa 1/4" x 1/2"	1
AI-LE-3	Balsa 1/4" x 1/2"	1
AI-SH-2	Balsa 1/16" x 3"	1
AI-TE-1	Balsa 1/4" x 3/4"	1
ROB311	Robart Hinge Ø1/8"	3

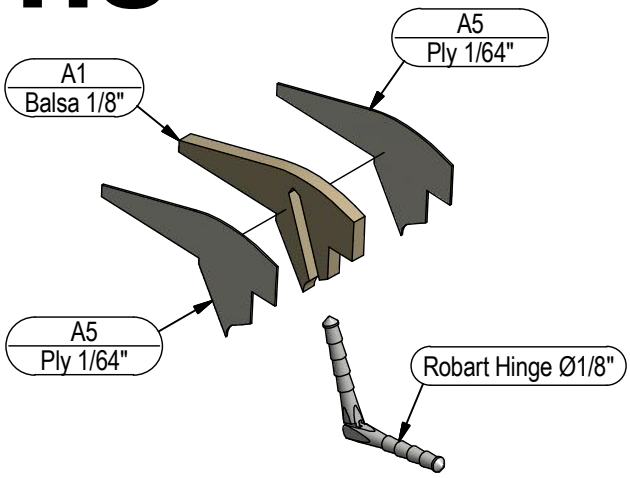

Aileron hinge
3 req. per aileron

Step 1

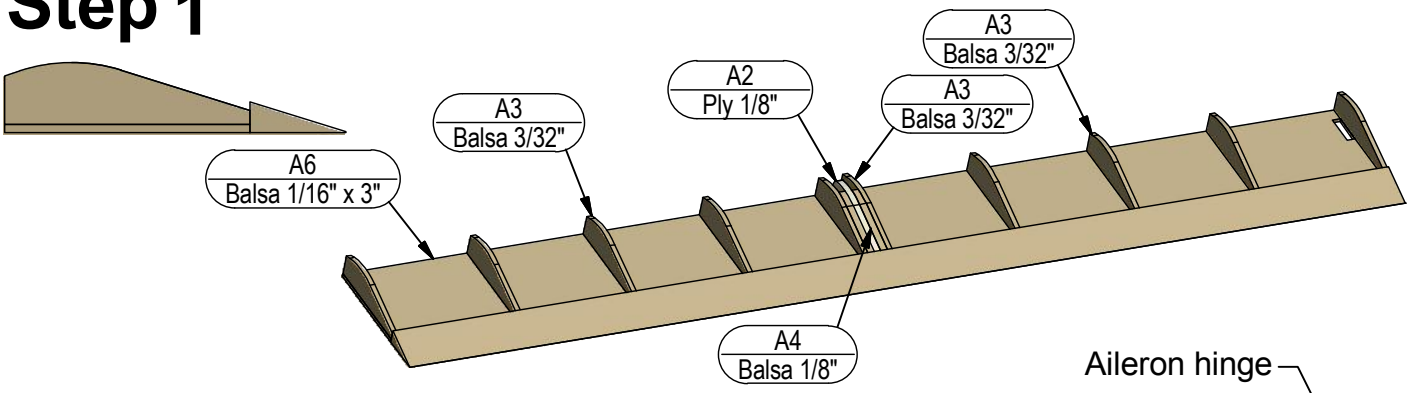

Step 2

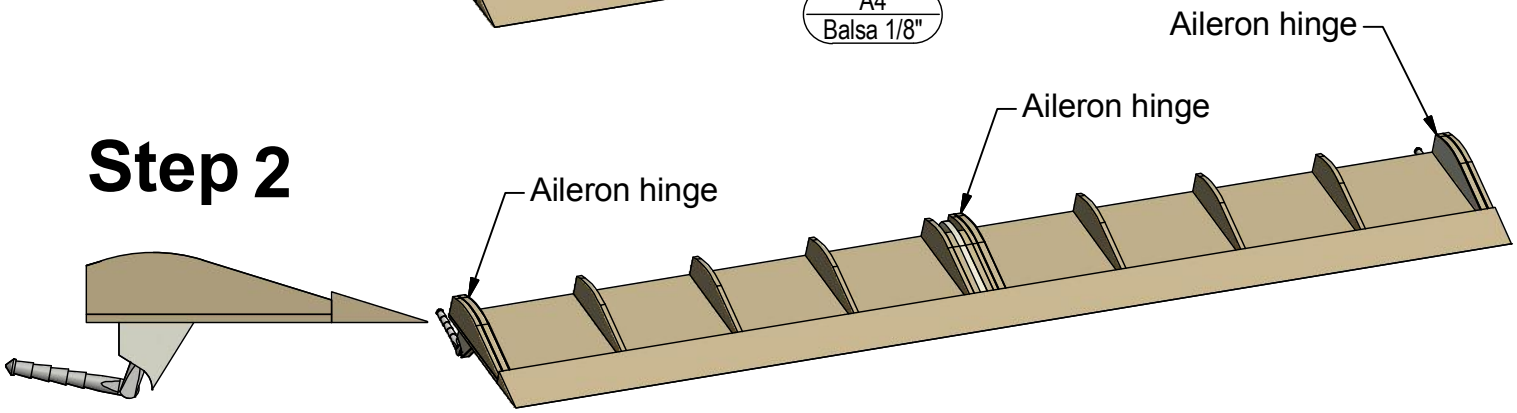

Step 3

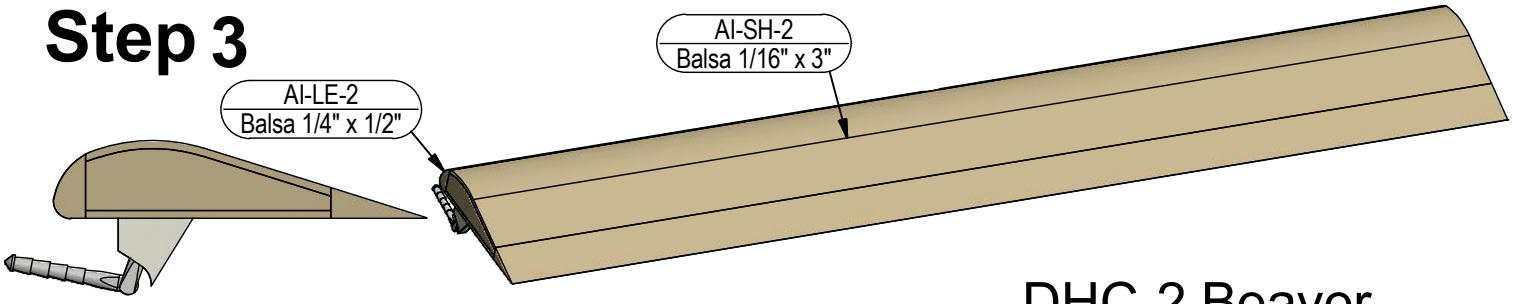

DHC-2 Beaver

© **MR *Aerodesign***

01-2013

WINGS

This is the procedure to build the right wing.
Follow the same step for the left wing.
The flaps and ailerons need to be build first, because you need it to align some ribs.
Be sure that you do not build 2 right or 2 left wings !

Parts List (1 wing)			Parts List (1 wing)		
PART NUMBER	DESCRIPTION	QTY	PART NUMBER	DESCRIPTION	QTY
BN6	Blind nut 6-32	1	W-ST-3	Balsa 1/8" x 3/8"	1
DUB172	Threaded rod 2-56 thread x 12"	2	W-ST-4	Balsa 1/4" x 1/4"	1
DUB202	Steel Strap	1	W-ST-5	Balsa 1/4" x 1/4"	1
DUB212	Threaded coupler 2-56	2	W-ST-6	Balsa 1/4" x 1/4"	1
DUB556	Servo Horn	2	W-STR-1	Hardwood 1/4" x 3/8"	4
DUB600	2-56 Spring steel Kwik-link	4	W-STR-2	Hardwood 1/4" x 3/8"	8
F-STR-3	Hardwood 1/4" x 1/2"	1	W-SW-1	Ply 1/8"	5
FG-wingtip-right	Fiberglass wing tip (right)	1	W-SW-2	Balsa 3/32" x 1 1/2"	9
Phen-tube-w	Phenolic tube Ø5/8" int.	1	W-SW-4	Ply 1/8"	1
ROB316	Ø1/8" Hinge socket	6	W-TE-1	Balsa 1/16" x 1 1/2"	1
SS2-07	Servo Screw #2x7/16"	16	W1	Ply 1/8"	1
Servo-tray	Servo tray	4	W2	Ply 1/8"	1
W-DH-1	Balsa 3/32"	1	W3	Ply 1/8"	1
W-DH-2	Balsa 3/32"	1	W4	Ply 1/8"	1
W-DW-1	Dowel Ø1/4"	1	W5	Ply 1/8"	1
W-LE-1	Balsa 1/4" x 3/4"	1	W6	Ply 1/8"	1
W-LE-2	Balsa 3/32" x 3/4"	1	W7	Balsa 1/8"	8
W-MS-1	Hardwood 1/4" x 1/2"	2	W7A	Ply 1/8"	1
W-MS-2	Balsa 3/32" x 1/4"	4	W7S	Balsa 1/8"	2
W-MS-3	Hardwood 1/4" x 1/2"	1	W8	Balsa 1/8"	1
W-SH-1	Balsa 3/32" x 4"	1	WP1	Balsa 3/32"	3
W-SH-2	Balsa 3/32" x 3"	1	WP1A	Balsa 1/4"	1
W-SH-3	Balsa 3/32" x 4"	1	WP2	Balsa 1/16"	3
W-SH-4	Balsa 3/32" x 4"	1	WP3	Ply 1/64"	6
W-SH-5	Balsa 3/32" x 2"	1	WP4	Balsa 1/8"	3
W-SH-6	Balsa 3/32" x 3"	1	WP5	Balsa 1/16"	3
W-ST-1	Balsa 1/4" x 1/4"	4	WP6	Ply 1/64"	6
W-ST-2	Balsa 1/4" x 3/8"	1			

Step 1

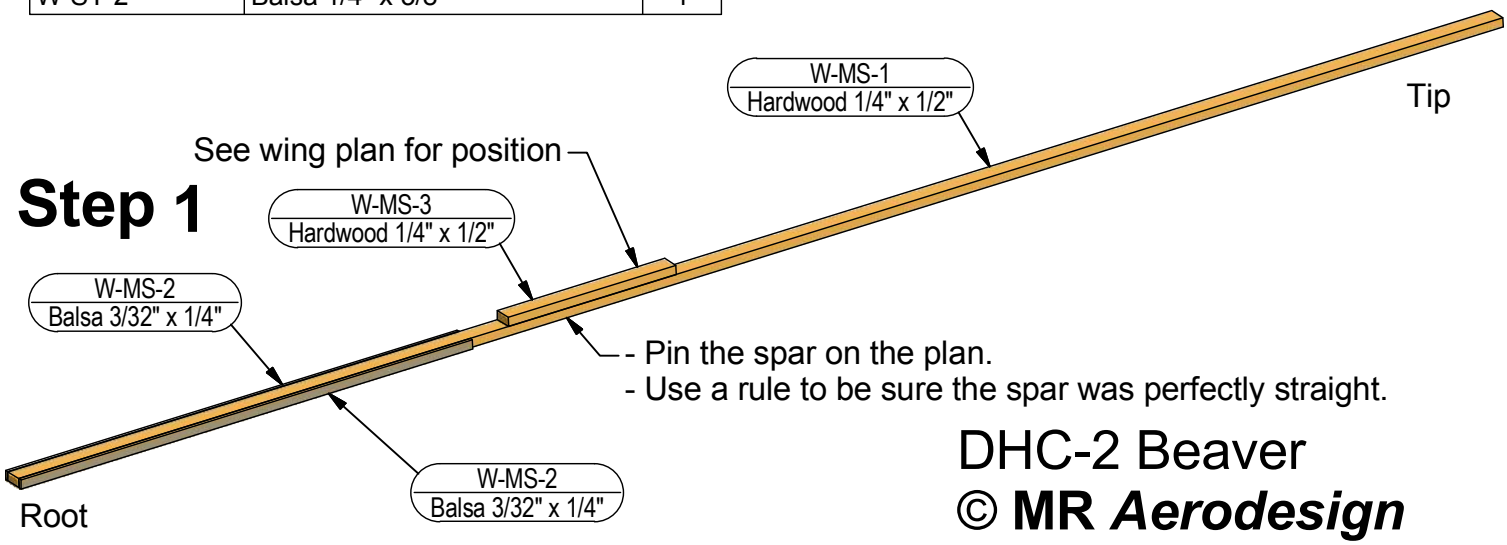

- Pin the spar on the plan.
- Use a rule to be sure the spar was perfectly straight.

DHC-2 Beaver

© MR *Aerodesign*

01-2013

Step 2

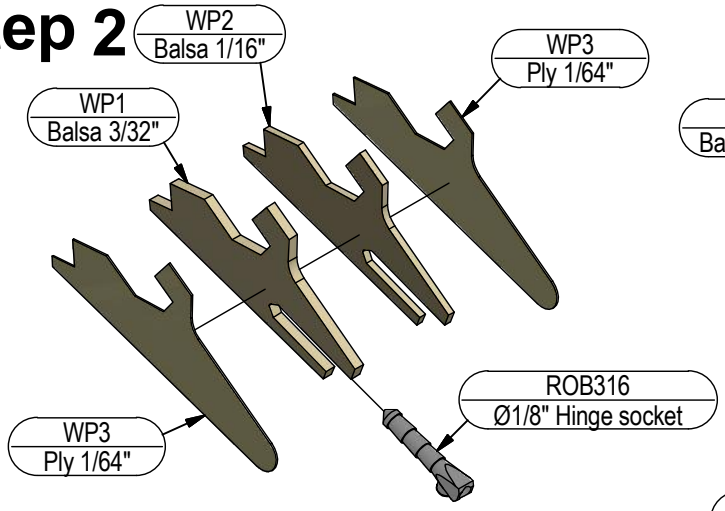

Flap pivot arm
(3 req per wing)

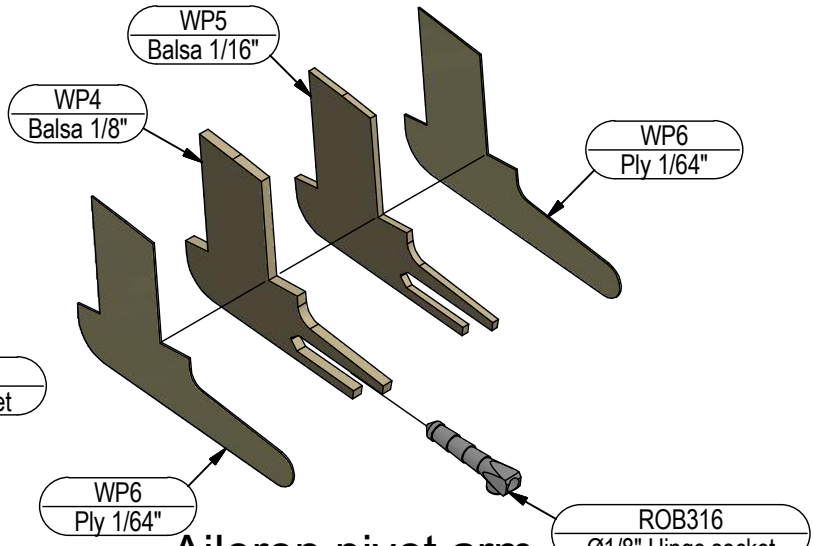

Aileron pivot arm
(3 req per wing)

Assemble temporary the pivot arm on the control surface.

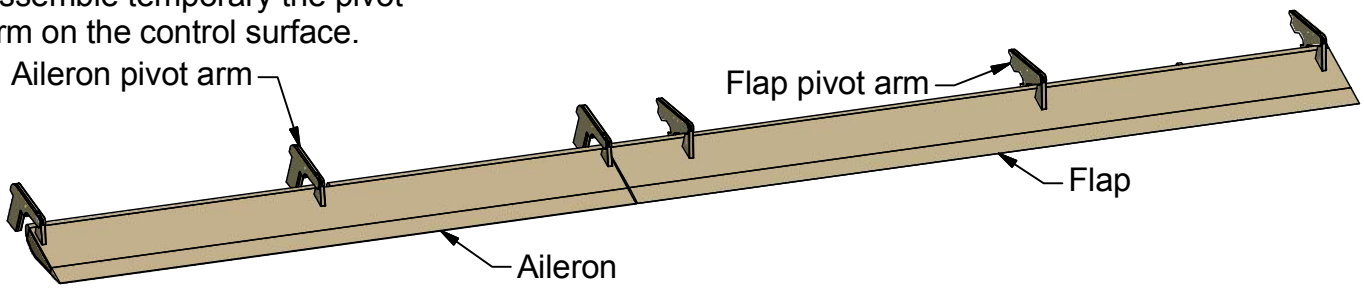

Step 3

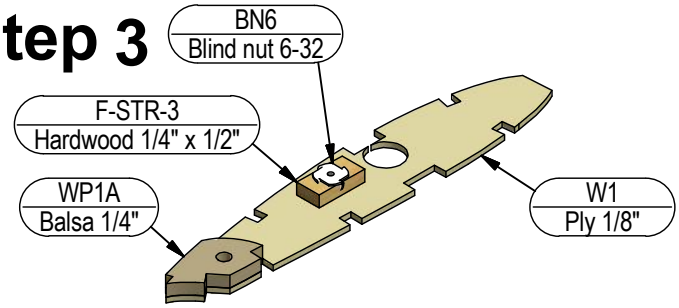

Glue hardwood and blind nut with epoxy.

**** Be carefull to not put epoxy in the thread blind nut****

Step 4

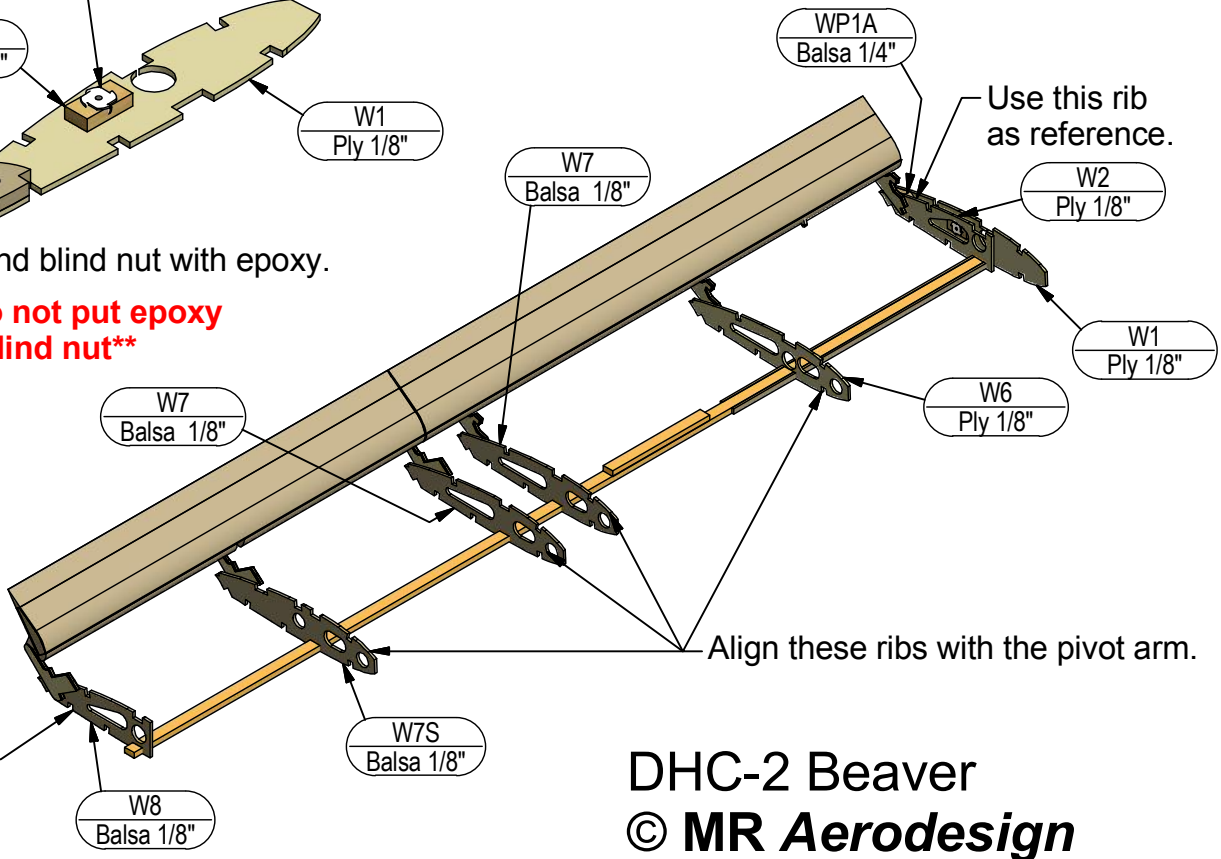

DHC-2 Beaver

© **MR *Aerodesign***

01-2013

WINGS

Step 5

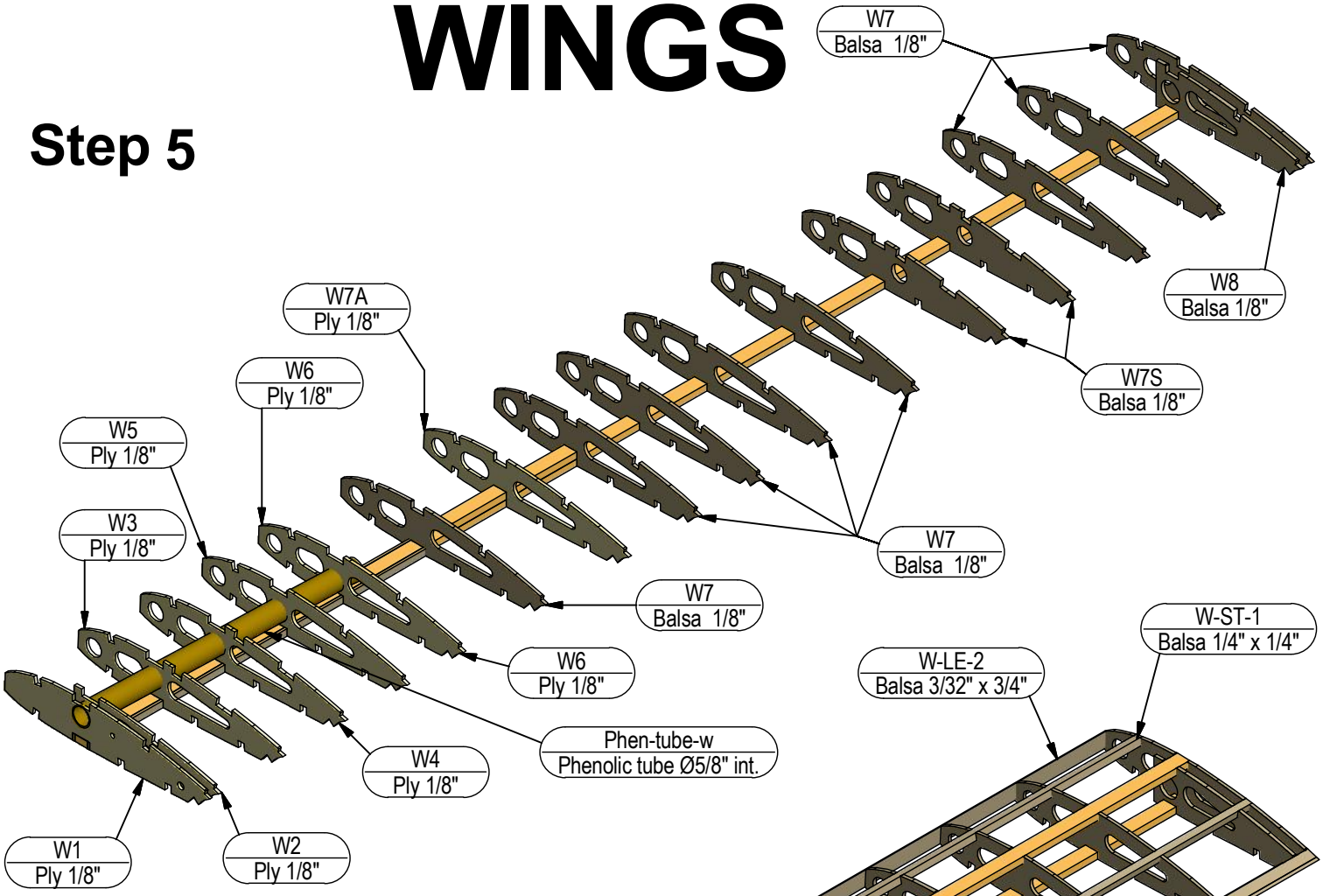

Step 6

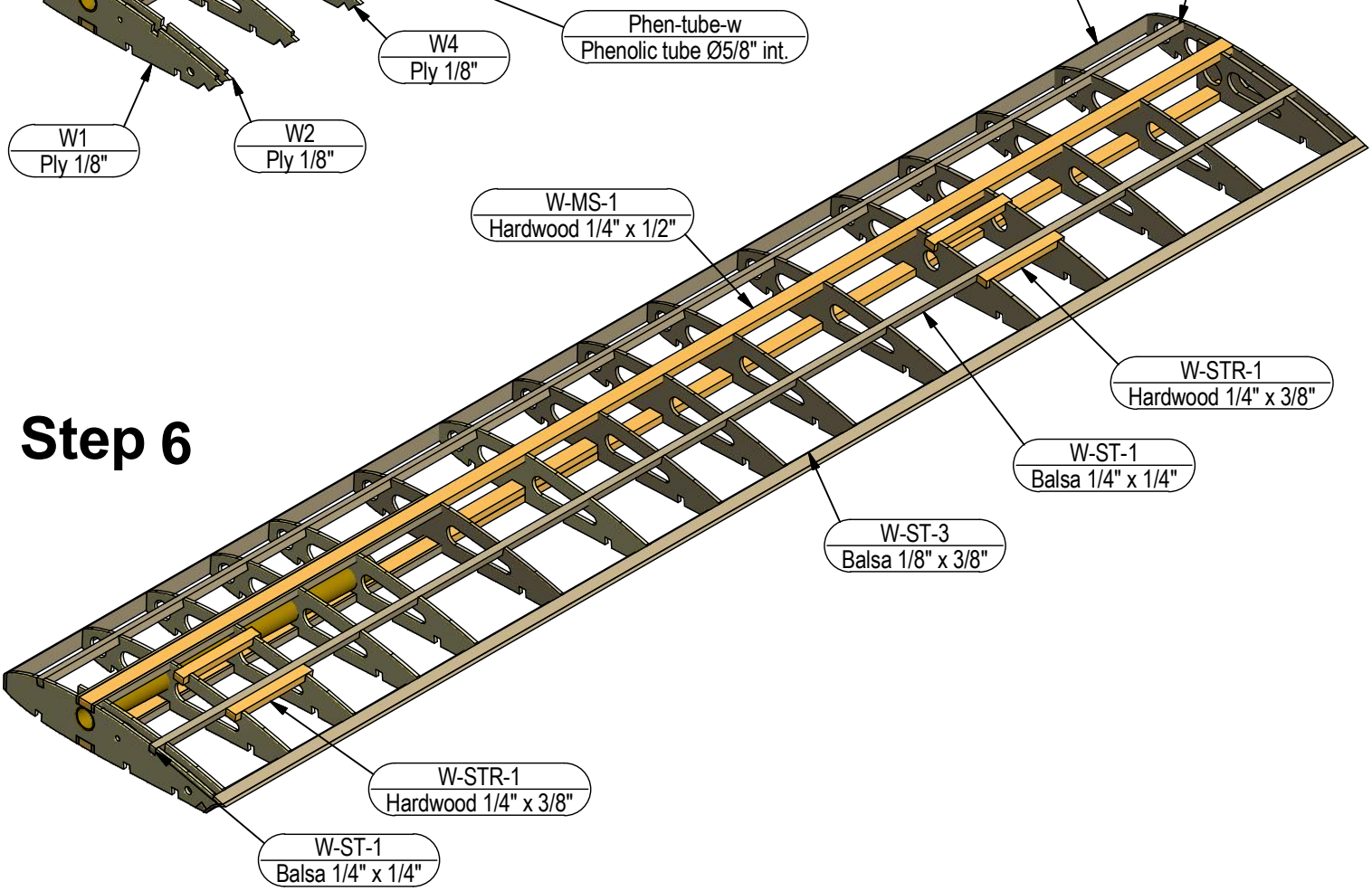

DHC-2 Beaver

© **MR *Aerodesign***

WINGS

Step 7

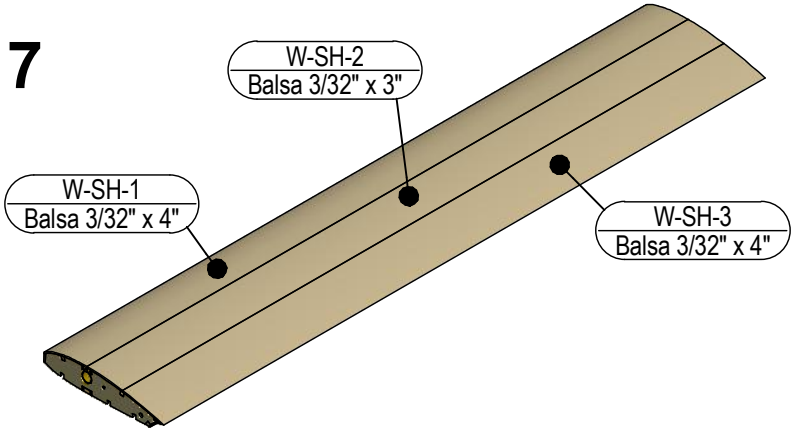

Step 8

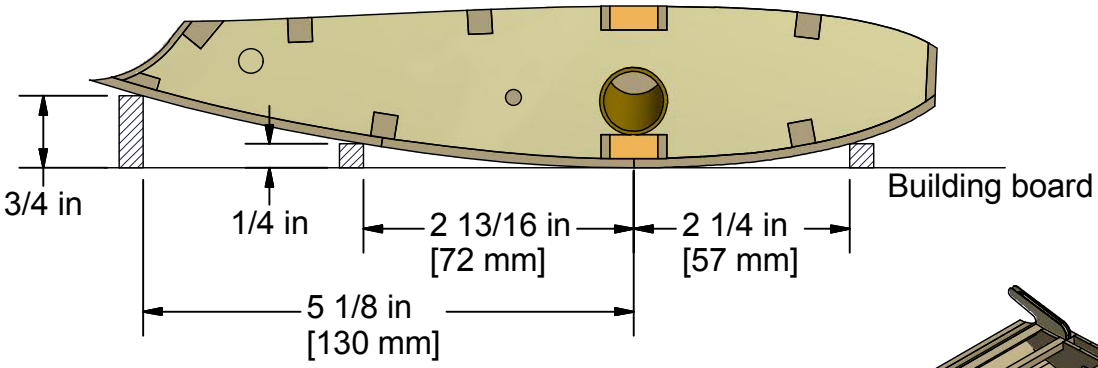

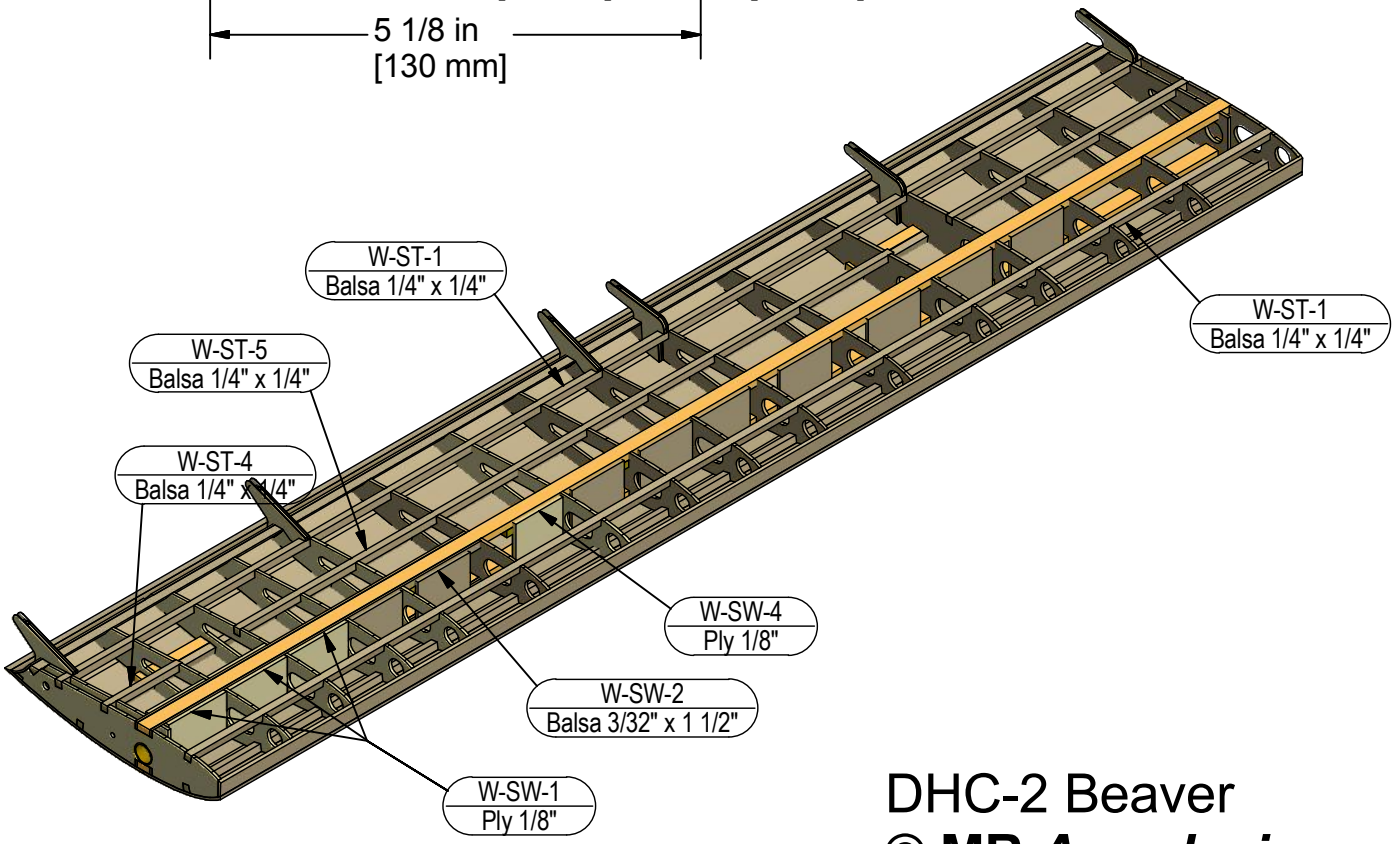

DHC-2 Beaver

© **MR *Aerodesign***

01-2013

WINGS

Step 9

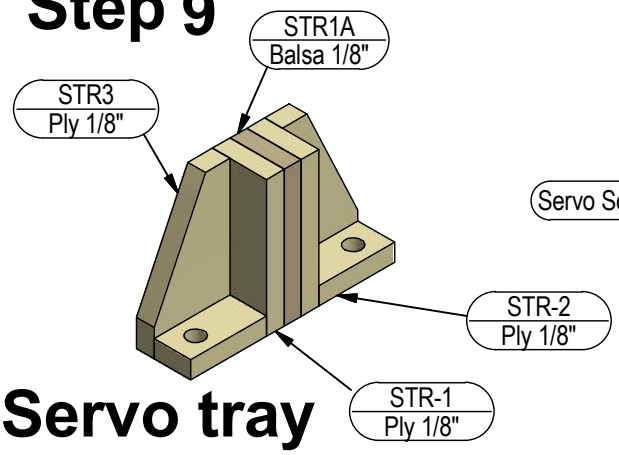

Servo tray

(4 req. for each wing - Total 4)

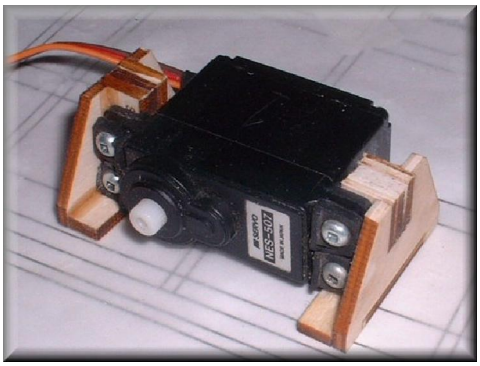

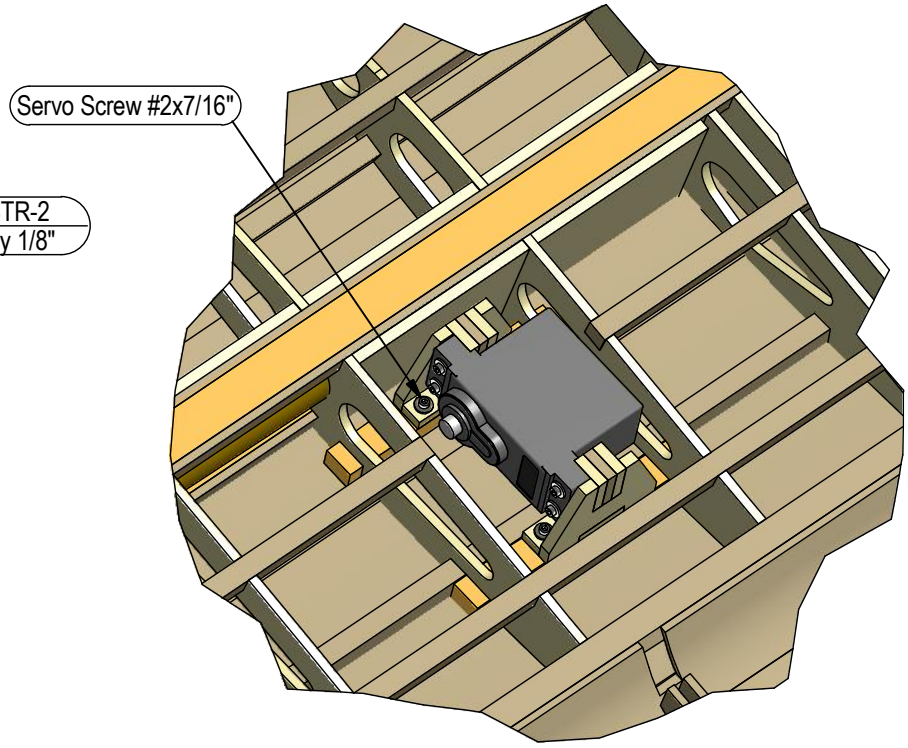

Step 10

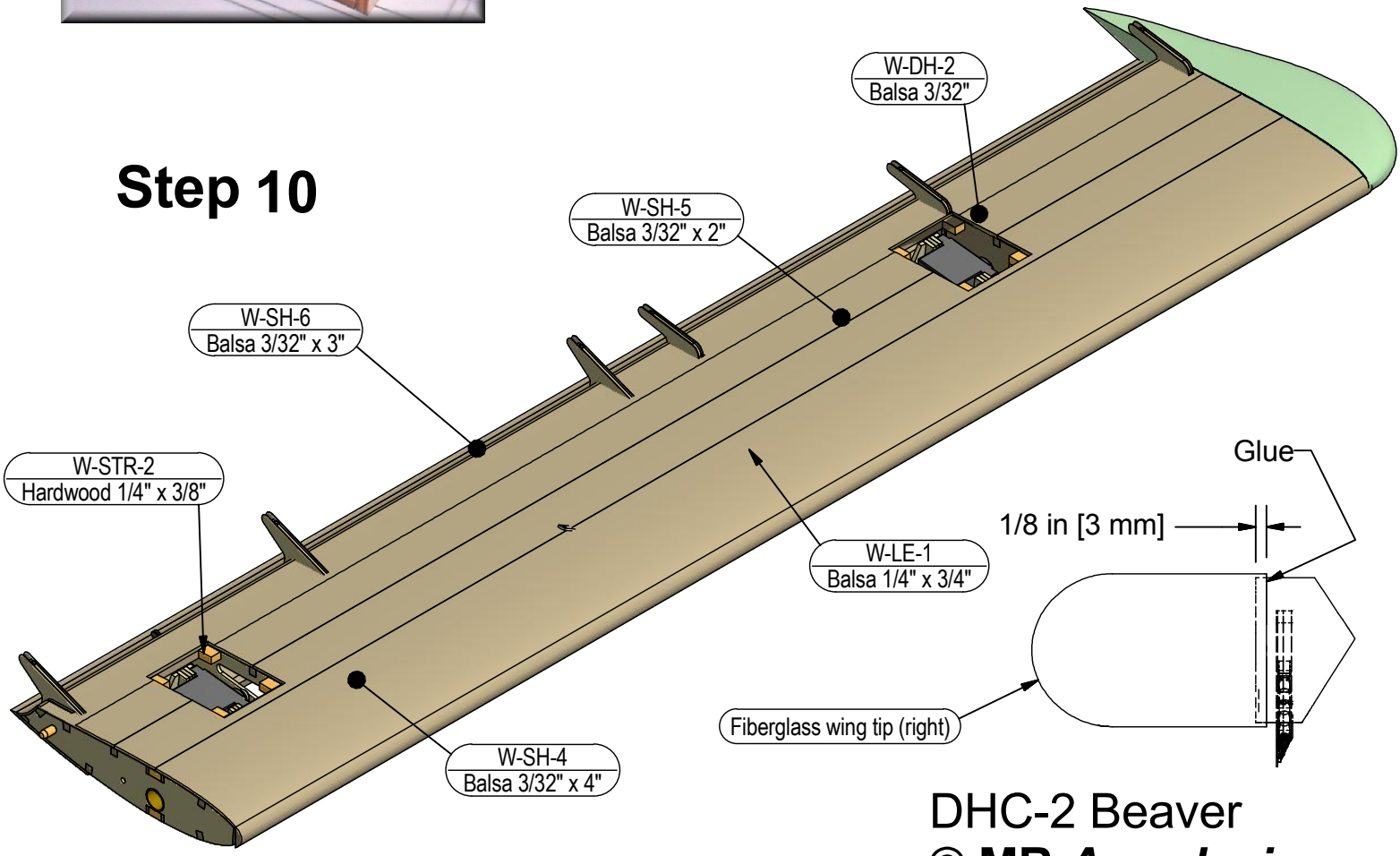

DHC-2 Beaver

© **MR *Aerodesign***

01-2013

Wing Struts
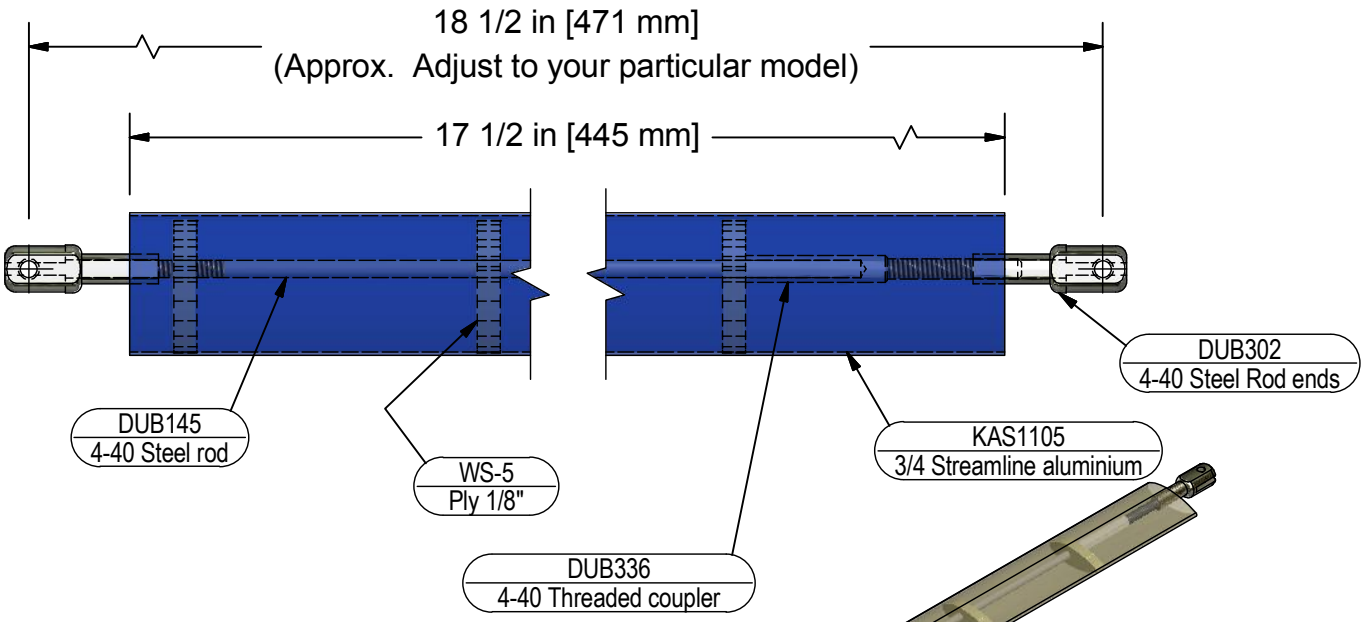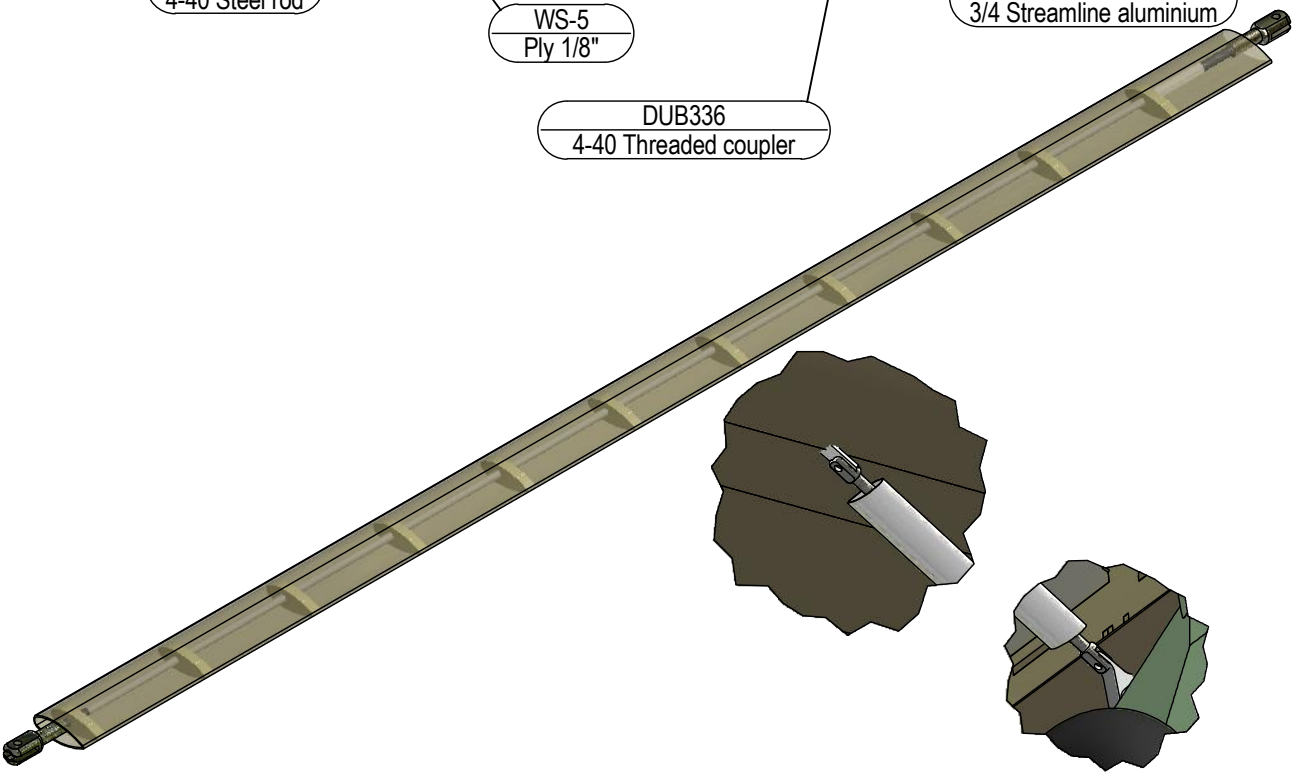
Parts List (For 1 strut)		
PART NUMB	DESCRIPTION	QTY
DUB145	4-40 Steel rod	1
DUB302	4-40 Steel Rod ends	2
DUB336	4-40 Threaded coupler	1
KAS1105	3/4 Streamline aluminium	1
WS-5	Ply 1/8"	11